SUBMITTAL FOR APPROVAL

Exxel Pacific, Inc.
201602. - The Cora Apartments (19 W Harrison)

DATE: 11/23/2016
SPEC #: 22 0000-06
REV #: 0

To: **John Whitlow**
VIA Architecture
1809 7th Avenue, Suite 800
Seattle, WA 98101

From: **Jola Bielecki**
Exxel Pacific, Inc.
323 Telegraph Road
Bellingham, WA 98226

We are transmitting the following **Submittal 22 0000-06 - Plumbing Fixtures Data**; Rev 0 item(s) for your review in accordance with the contract specification # 22 0000-06.

Please review and respond to Jola Bielecki by 11/30/2016 in accordance with the contract documents.

Additional Notes:

Submittal Item	Activity Date	Sent To Arch	Copies	Remarks
Plumbing Fixtures Data	11/23/2016	11/23/2016	1	part 1 of 3

Sincerely,

Jola Bielecki

EXXEL PACIFIC, INC.
323 Telegraph Road Bellingham, WA 98226

Submittal # 22 0000-06	Date Submitted 11/23/2016	Reviewed By *J.B.*

- [x] No Exceptions Taken
- [ ] Make Corrections Noted
- [ ] Revise and Resubmit
- [ ] Rejected

This review is for general conformance with contract documents only and does not relieve the subcontractor/ supplier of responsibility for compliance with applicable drawings, specifications and code.

- [ ] Reviewed by consultant- No VIA comments
- [x] Reviewed as noted
- [ ] Revise and Resubmit
- [ ] Rejected
- [ ] Submittal not required – returned without review.

This review is only for general compliance with the design concept of the project and general compliance with the information given in the contract documents. Corrections or comments made on the shop drawings during this review do not relieve the contractor from compliance with requirements of the contract documents and applicable laws, codes and regulations. The contractor remains responsible for confirming and correlating all quantities and dimensions, selecting fabrication means and methods of construction, coordinating his or her work with that of all other trades and performing all work in a safe and satisfactory manner.

VIA Architecture Incorporated
John X Whitlow
By: VIA Architecture Date: 12-14-2016

SUBMITTAL TRANSMITTAL

127 10th Street South Suite 200, Kirkland, WA 98033
425-968-8314 Office / (425) 968-8794 Fax

DATE: 26-Oct-16 **JOB NO.:** 2025

TO: Exxel Pacific General Contractors
4220 Aurora Avenue North
Seattle, WA 98103

ATT: Jola Bielecki

RE: The Cora Apartments
19 W. Harrison Street
Seattle, WA 98119

We are delivering by: ☑ Email ☐ Hand Delivering

The following items:

Spec Section	Item	Drwg Ref	Description	Manufacturer	Model No.
Div 22			Plumbing Fixture Submittals		

REQUESTED RETURN DATE: ASAP

SUB/SUPPLIER NAME:

REMARKS:

See table of contents attached, use bookmarks to navigate.

COPY TO: Submittal File

CC:

SIGNED: Richard Donelson

PROJECT: CORA APARTMENTS
PLUMBING FIXTURE SUBMITTALS - ONE WAY PLUMBING LLC

QUESTIONS FOR GC/OWNER/ARCHITECT:

1. Please confirm that handshowers are not needed at live/work unit bathtubs.
   Owner decision.

2. Two options, with pricing, have been sent in for a bottle filler at the fitness room. Please confirm which one has been selected.
   Owner decision.

TAG	DESCRIPTION:	LOC:
WC-1	WATER CLOSET, FLUSH TANK, Gerber 21-912EB, gravity flush tank, elongated front, 1.28 gpf, vitreous china, white. Seat: Bemis 1500EC, elongated front, with cover. LSP V104-A-LL brass angle stop and LSP SWC-112-PP braided stainless steel supply.	Type B Units
WC-2	WATER CLOSET, FLUSH TANK, Toto CST244EL, gravity flush tank, 17" high, elongated, 1.28 gpf, vitreous china, white. Install to meet ADA as required. Seat: Bemis 1500EC, elongated, with cover. LSP V104-A-LL brass angle stop and LSP SWC-112-PP braided stainless steel supply.	Type A Units
WC-3	WATER CLOSET, FLUSH TANK, Toto CST244EL, gravity flush tank, 17" high, elongated, 1.28 gpf, vitreous china, white. Install to meet ADA as required. Seat: Bemis 1955CT, elongated, open front less cover. LSP V104-A-LL brass angle stop and LSP SWC-112-PP braided stainless steel supply.	Amenity & Retail Restrooms
L-1	LAVATORY, Toto LT221, undercounter, vitreous china, white. Faucet: Grohe 34.270.001, single lever, 1.5 gpm, with pop-up waste assembly. Dearborn P9704 p-trap and LSP V104-A-LL brass angle stops.	Type B Units
L-2	LAVATORY, Toto LT221, undercounter, vitreous china, white. Faucet: Grohe 34.270.001, single lever, 1.5 gpm, with pop-up waste assembly. Dearborn P9704 p-trap and LSP V104-A-LL brass angle stops. Include insulation kit on p-trap and water supply to meet ADA.	
L-3	LAVATORY, Toto LT221, undercounter, vitreous china, white. Faucet: Grohe 34.271.001, single lever, 0.5 gpm, with grid drain waste assembly. Dearborn P9704 p-trap and LSP V104-A-LL brass angle stops. Include insulation kit on p-trap and water supply to meet ADA.	Fitness Restroom

L-4	LAVATORY, Toto LT221, undercounter, vitreous china, white. Faucet: Grohe 34.271.001, single lever, 0.5 gpm, with grid drain waste assembly. EEMAX MT007240T on-demand electric water heater for hot water supply at retail restroom lavatory only. Dearborn P9704 p-trap and LSP V104-A-LL brass angle stops. Include insulation kit on p-trap and water supply to meet ADA. Electrical: 240v, 27 amp	Retail Restroom
TS-1	BATHTUB/SHOWER COMBO, Tub/Shower Trim Kit: Delta T14459, chrome, single handle, 1.5 gpm shower head, diverter slip tub spout, with Delta R10000MF pressure balance valve. Tub drain kit: LSP R-6011RK/R0910 chrome waste and overflow assembly. ALREADY APPROVED VIA PRIOR SUBMITTAL: Aquatic 2603SMTE, 60"W x 33-1/4"D x 79-1/4"H exterior dimensions, 1-piece fiberglass tub/shower stall with backing for future grab bar installation.	Type B Tubs
TS-2	BATHTUB/SHOWER COMBO, Tub/Shower Trim Kit: Delta T14459, chrome, single handle, diverter slip tub spout, with Delta RPW324HDF-1.5 hand held shower and slide bar with Delta R10000MF pressure balance valve. Tub drain kit: LSP R-6011RK/R0910 chrome waste and overflow assembly. ALREADY APPROVED VIA PRIOR SUBMITTAL: Aquatic 2603SMTE, 60"W x 33-1/4"D x 79-1/4"H exterior dimensions, 1-piece fiberglass tub/shower stall with grab bars and folding seat.	Type A Tubs
SS-1	SHOWER STALL, Tub/Shower Trim Kit: Delta T14259, chrome, single handle, 1.5 gpm shower head with Delta R10000MF pressure balance valve. Oatey 42097 PVC shower drain. ALREADY APPROVED VIA PRIOR SUBMITTAL: Aquatic 1483EN, 48"W x 38-3/4"D x 77-3/4"H exterior dimension, 1-piece fiberglass shower stall with permanent curb threshold. Stall includes grab bar backing in fiberglass walls.	Type B Showers
S-1	SINK, SINGLE BOWL KITCHEN SINK, Lenova LS18304 single bowl, undercounter, stainless steel. Faucet: Grohe 32.665.001, chrome, single lever handle with pull-down spray head, 1.75 gpm. Dearborn P9704 p-trap and LSP V104-A-LL brass angle stop.	Type B Units
S-2	SINK, SINGLE BOWL KITCHEN SINK, type A units, Elkay ELUHAD2115-5 single bowl (5" deep), undercounter, stainless steel. Faucet: Grohe 32.665.001, chrome, single lever handle with pull-down spray head, 1.75 gpm. Dearborn P9704 p-trap and LSP V104-A-LL brass angle stop. Include insulation kit on p-trap and water supply to meet ADA.	Type A Units
S-3	SINK, SINGLE BOWL, Lenova PC-SS-ORI-S15 single bowl, undercounter, stainless steel. Faucet: Grohe 32.665.001, chrome, single lever handle with pull-down spray head, 1.75 gpm. Dearborn P9704 p-trap and LSP V104-A-LL brass angle stop.	Lobby Area Sink

DW	DISHWASHER, LSP V104-A-LL chrome angle stop with LSP KDW-660-PP flexible supply. Install Zurn CD4P plastic countertop mount airgap.	All Units
AW	WASHER CONNECTION - RESIDENTIAL TYPE, IPS WaterTite series recessed washer box kit with 2" drain, 1/2" hot & cold shutoff valves with hose connections and code approved water hammer arrestors. Install with rated box only where needed.	All Units
MOP	Mustee 63 fiberglass mop sink (24"x24"x10") with Mustee 63.600A wall mount chrome faucet.	Janitor 215
DBW	DOG/BIKE WASH, T&S Brass PG-8WREV wall hung hot and cold faucet with coiled polyurethane hose and aluminum spray head. Includes anti-syphon vacuum breaker.	P1
HB1	HOSE BIBB, Woodford 65B, with recessed box, non-freeze, anti-siphon, vacuum breaker, automatic draining, loose key handle. Size: 3/4"	Street Exterior, see plans
HB2	HOSE BIBB, Woodford 65, non-freeze, anti-siphon, vacuum breaker, automatic draining, loose key handle. Size: 3/4"	Deck Exterior, see plans
HB3	HOSE BIBB, Woodford 24, anti-siphon - vacuum breaker, wheel handle and loose tee key. Mechanical rooms. Size: 3/4"	P1, see plans
HB4	HOSE BIBB, Woodford 24, hot and cold hosebib at residential trash room with anti-siphon - vacuum breaker, wheel handle and loose tee key. Supply with tempered water thru Lawler tempering valve or equal. Size: 3/4"	Trash 211
HB5	HOSE BIBB, Woodford RHY2-MS, roof hydrant with anti-siphon - vacuum breaker, lever handle. . Size: 3/4"	Roof, near dog run
RD-1	ROOF DRAIN, Watts RD25, cast iron body, drain with overflow. Includes cast iron clamping collars and strainer.	Roof

WC-1 TYPE B WATER CLOSET

VITREOUS CHINA

TOILET
21-912

MAXWELL® 1.28 Elongated Toilet

12″ Rough-in

Features:

- 1.28 gpf/4.8 Lpf high efficiency two-piece toilet
- Elongated bowl
- Dual-fed siphon jet
- Pilot fill valve
- 3″ flush valve
- 2″ glazed trapway
- Color matched front tank lever (white only)
- ~~Optional insulated non-sweating tank~~
- ~~Optional right-handed trip lever~~
- Available in White, Bone and Biscuit
- 2 bolt caps

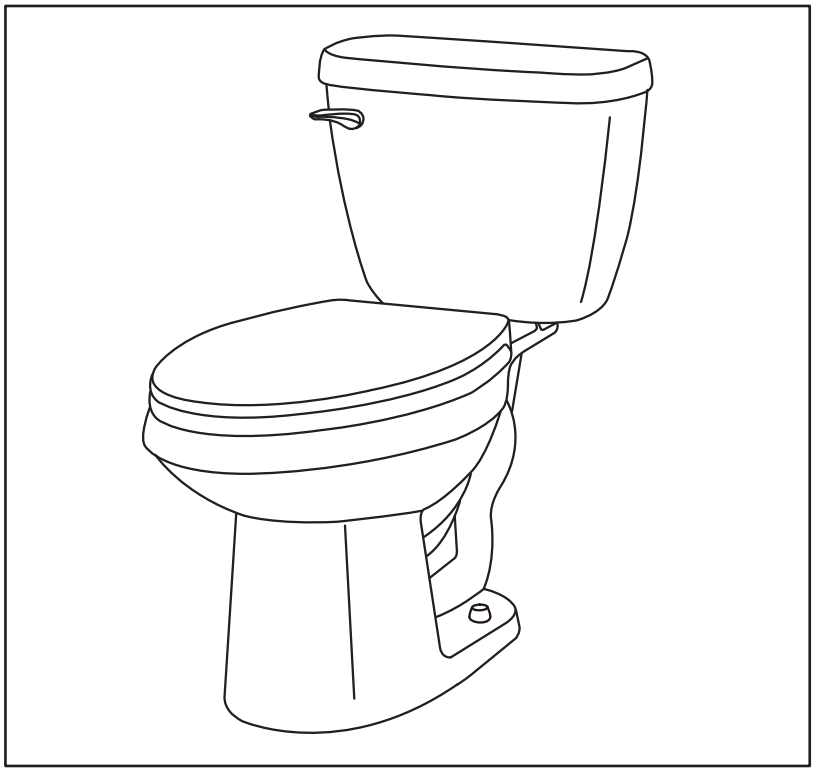

Specifications: *Bowl*—#21-962 Elongated Bowl *Tank*—#28-990
Seat not included

Dimensions:

Height	28″
Width	17 1/2″
Depth	28 1/8″
Rough-in	12″
Water Surface from Rim	5 7/8″
Trapway	2″
Water Surface	10 7/8″ x 7 1/2″
Water Seal	2 3/8″
Shipping Weight	79.5 lbs

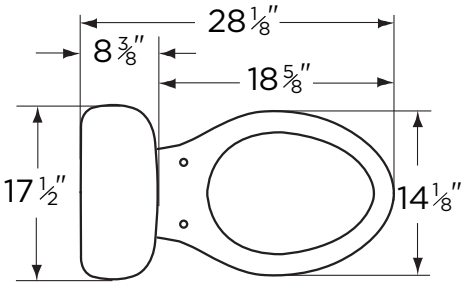

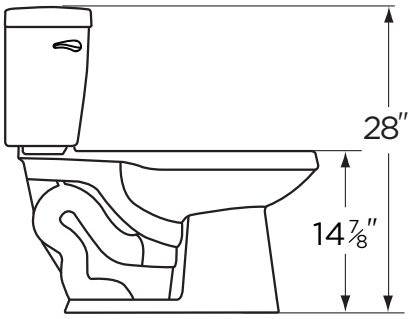

THIS FIXTURE QUALIFIES ACCORDING TO ASME TEST PROCEDURES AS A HIGH EFFICIENCY WATER CLOSET WITH AN AVERAGE CONSUMPTION OF 1.28 gpf (4.8 Lpf) OR LESS.

HIGH EFFICIENCY TOILET HET

www.gerberonline.com

Job Name	
Date	
Model Specified	
Quantity	
Customer	
Contractor	
Architect/engineer	

Because we are committed to continual product improvement, specifications are subject to change without notice.

WC-1 TYPE B WATER CLOSET

1.28 gpf (4.8 Lpf) MAXWELL® 1.28 TOILET

21-912
Elongated, 12″ Rough-in
(Bowl 21-962 with Tank 28-990)

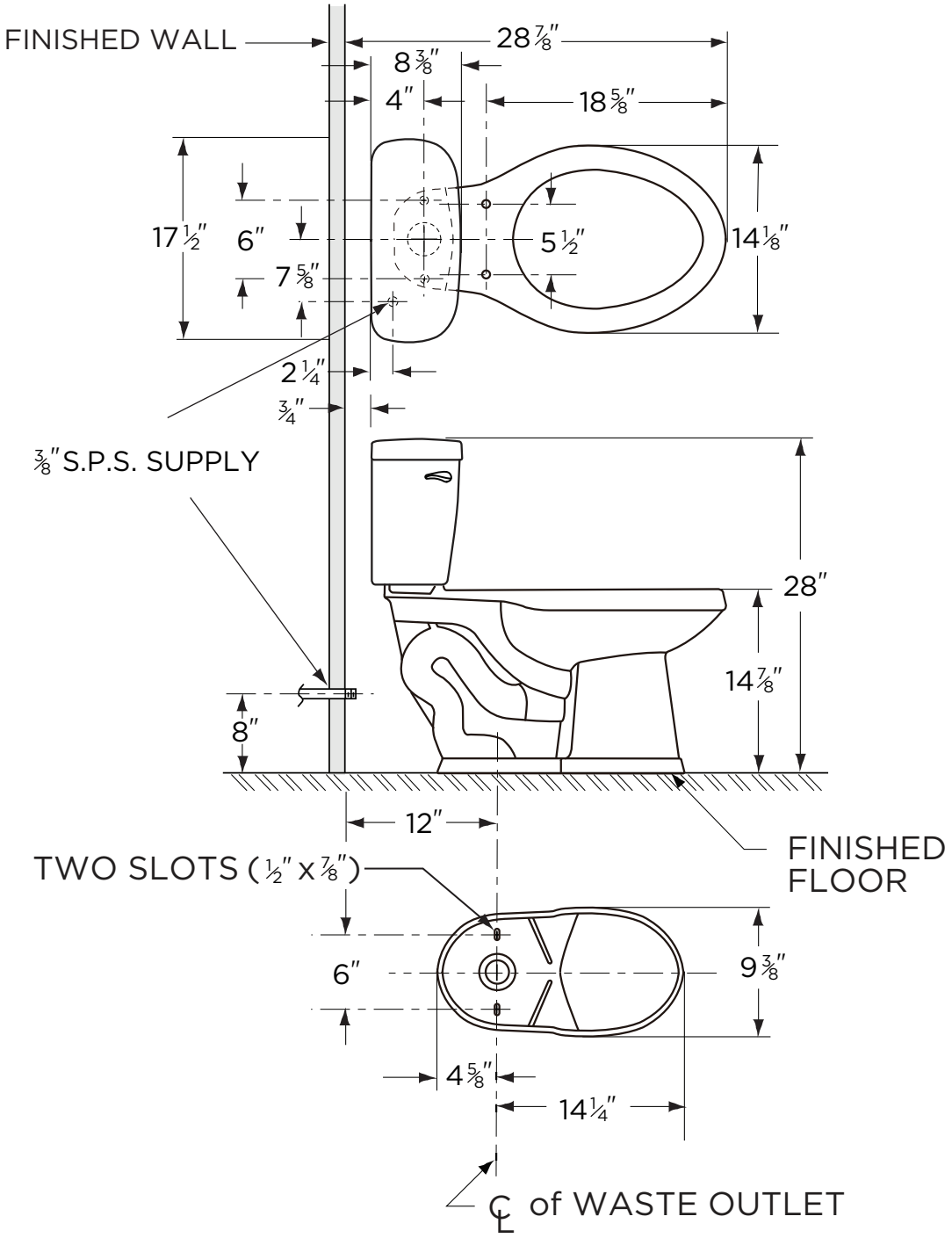

NOTES:
All dimensions are in inches.

Illustrations may not be drawn to scale.

IMPORTANT:
Dimensions of fixtures are nominal and may vary within the range of tolerances established by ASME Standard A 112.19.2.

THIS FIXTURE QUALIFIES ACCORDING TO ASME TEST PROCEDURES AS A HIGH EFFICIENCY WATER CLOSET WITH AN AVERAGE CONSUMPTION OF 1.28 gpf (4.8 Lpf) OR LESS.

WC-1 TYPE B WATER CLOSET

RESIDENTIAL MOLDED WOOD TOILET SEAT

MODEL #	COLOR #
1500EC	WHITE

DESCRIPTION:

Closed front with cover, elongated, molded wood, multi-coat enamel finish toilet seat. Features two color-matched bumpers, color-matched Easy•Clean & Change® hinges with non-corrosive, top-tightening bolts and wing nuts.

SPECIFICATIONS:

Size:	Elongated
Material:	Molded Wood
Style:	Closed Front with Cover
Bumpers:	Two
Hinges:	Plastic Easy•Clean & Change®
Fastening System:	Non-Corrosive Bolts and Wing Nuts

PLASTIC EASY•CLEAN & CHANGE® HINGES

TWIST HINGES TO UNLOCK

FEATURES:

Easy•Clean & Change®

Non-Corrosive Bolts and Wing Nuts

EASY REMOVAL OF SEAT FOR THOROUGH CLEANING

NON-CORROSIVE BOLTS AND WING NUTS

DIMENSIONS:

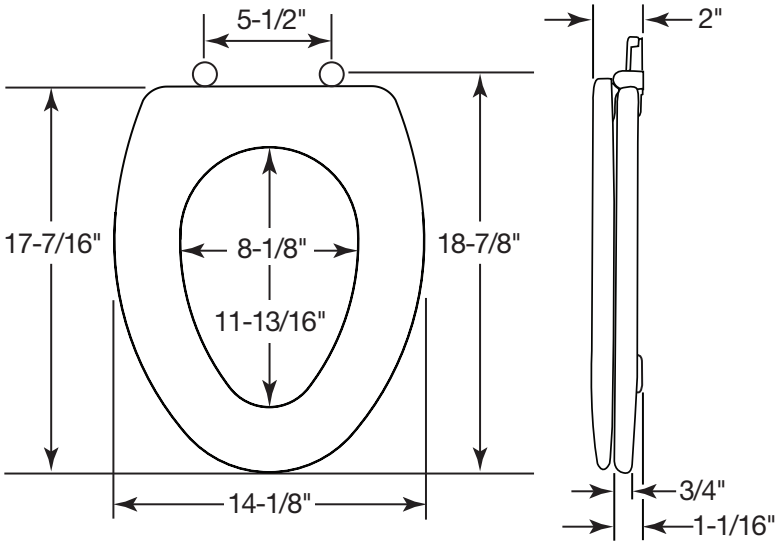

Proudly Made in the USA

Bemis Manufacturing Co., Sheboygan Falls, WI 53085
www.ToiletSeats.com

Phone: 800-558-7651 Fax: 800-292-3647

WC-1 TYPE B WATER CLOSET

AQUAFLO®

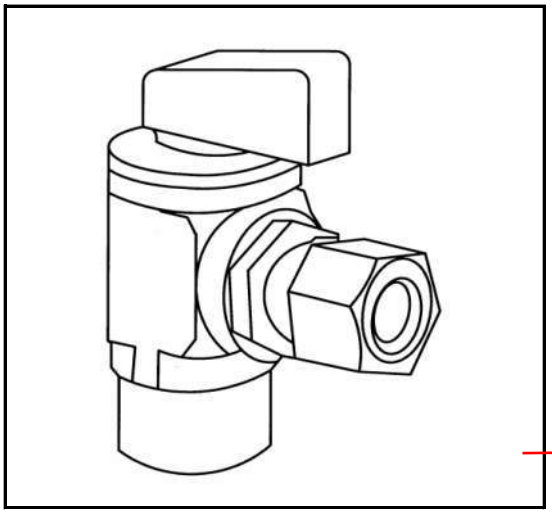

QUARTER-TURN ANGLE VALVES

Specification Sheet

NICKEL		
PART NUMBER	INLET	OUTLET
V-001-A	5/8" O.D. Compr	1/4" O.D. Compr
V-100-A	1/2" Sweat	3/8" O.D. Compr
V-101-A	5/8" O.D. Compr	3/8" O.D. Compr
V-102-A	1/2" F.I.P.	3/8" O.D. Compr
V-103-A	1/2" PEX	3/8" O.D. Compr
V-104-A	1/2" WIRSBO PEX	3/8" O.D. Compr
V-105-A	3/8" F.I.P.	3/8" O.D. Compr
V-106-A	3/8" O.D. Compr	3/8" O.D. Compr
V-107-A	1/2' F.I.P.	3/4" Hose Thread
V-300-A	1/2" Sweat	1/2" O.D. Compr
V-301-A	5/8" O.D. Compr	1/2" O.D. Compr
V-302-A	1/2" F.I.P.	1/2" O.D. Compr
V-303-A	1/2" PEX	1/2" O.D. Compr
V-400-A	1/2" Sweat	1/2" OR 7/16" Slip Joint
V-401-A	5/8" O.D. Compr	1/2" OR 7/16" Slip Joint
V-402-A	1/2" F.I.P.	1/2" OR 7/16" Slip Joint
V-403-A	1/2" PEX	1/2" M.I.P. / Sweat
V-500-A	1/2" CPVC	3/8" O.D. Compr
V-602-A	5/8" O.D. Compr	3/8" O.D. Compr.
POLISHED BRASS		
V-201-A	5/8" O.D. Compr	3/8" O.D. Compr
V-202-A	1/2" F.I.P.	3/8" O.D. Compr

For Lead Free product add "-LL" to the end of the part number.

DESIGN FEATURES

- Quick quarter-turn shut-off.
- Heavy duty brass construction ensures durability.
- Ball style valve will not freeze up.
- Teflon seats for extra wear resistnace.
- Pliable 0-rings will not distort or break down.
- One-year limited warranty

COMPLIANCES/LISTINGS

- IAPMO Certified
- NSF Compliant
- Meet or exceed ASME A112.18.1
- Federal Specification WWP 541E

Certified to NSF/ANSI 61

OPERATING SPECIFICATION

Temperature: 40-180ºF
Pressure: 125 PSI max.

Product Submittal	
Job Name	
Date	
Part Number	Quantity
Architect	
Contractor	

LSP PRODUCTS GROUP
3689 Arrowhead Drive, Carson City, NV 89706
Phone (800) 854-3215 Fax (800) 243-1777
E-mail sales@lspproducts.com Website www.lspproducts.com

Content matter is subject to change at any time. It is the user's responsibility to ensure the most updated revisions are obtained.

AF/S-2017 (05-11) Rev 3

WC-1 TYPE B WATER CLOSET

AQUAFLO®

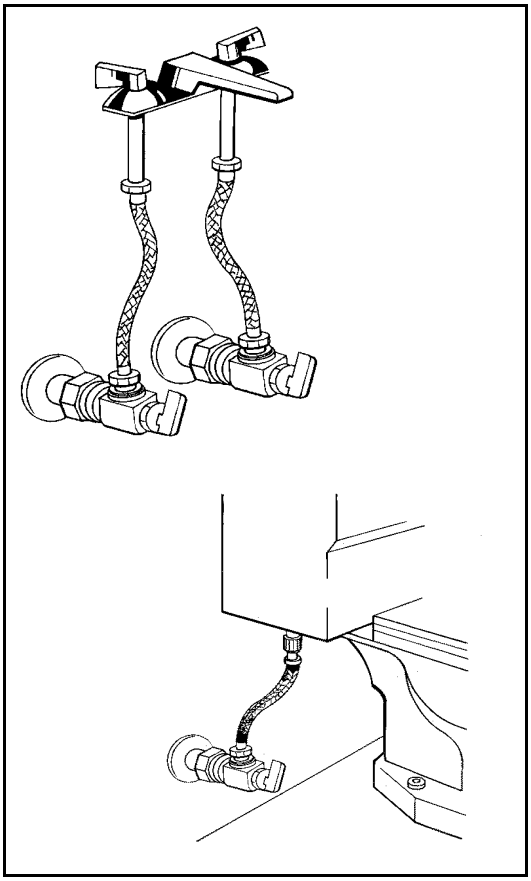

MIGHTYFLEX
STAINLESS STEEL CONNECTORS
Specification Sheet

DESIGN FEATURES
- Chloramine resistant soft cone.
- Exclusive POWR-TIGHT 12-point crimp-many times industry standard.
- Chloramine resistant tubing
- Withstands dramatic changes in water pressure
- Easy installation, no special tools required

COMPLIANCES/LISTINGS
- IAPMO Certified
- NSF Compliant
- ASME A112.18.6

MATERIAL SPECIFICATION
- Working Pressure: 160 psi Maximum
- Operating Temperature: 33°F-140°F
- Tubing: Reinforced PVC, NSF 61 Compliant
- Nuts & End fittings - Nickel Plated Brass
- Washers - NSF 61 Compliant

Product Submittal	
Job Name	
Date	
Part Number	Quantity
Architect	
Contractor	

LSP® PRODUCTS GROUP

3689 Arrowhead Drive, Carson City, NV 89706
Phone (800) 854-3215 Fax (800) 243-1777
E-mail sales@lspproducts.com Website www.lspproducts.com

Content matter is subject to change at any time. It is the user's responsibility to ensure the most updated revisions are obtained.

AF/S-2010 (04-08) Rev 4

WC-1 TYPE B WATER CLOSET

AQUAFLO®

MIGHTYFLEX
STAINLESS STEEL CONNECTORS
Specification Sheet

FAUCET CONNECTORS

PART NUMBER	DESCRIPTION	LENGTH
SFC-109-PP	1/2" FIP Soft Cone x 3/8" Soft Compression	9"
SFC-112-PP		12"
SFC-116-PP		16"
SFC-120-PP		20"
SFC-124-PP		24"
SFC-130-PP		30"
SFC-136-PP		36"
SFC-148-PP		48"
SFC-196-PP		96"
SFC-312-PP	1/2" FIP Soft Cone x 1/2" Compression Soft Cone	12"
SFC-316-PP		16"
SFC-320-PP		20"
SFC-324-PP		24"
SFC-330-PP		30"
SFC-348-PP		48"
SFC-409-PP	1/2' FIP Soft Cone x 1/2" FIP Soft Cone	9"
SFC-412-PP		12"
SFC-416-PP		16"
SFC-420-PP		20"
SFC-424-PP		24"
SFC-430-PP		30"
SFC-436-PP		36"
SFC-448-PP		48"
SFC-506-PP	3/8" Soft Compression x 3/8" Soft Compression	6"
SFC-509-PP		9"
SFC-512-PP		12"
SFC-516-PP		16"
SFC-520-PP		20"
SFC-524-PP		24"
SFC-530-PP		30"
SFC-548-PP		48"
SFC-572-PP		72"
SFF-112-PP	1/2" FIP Soft Cone x 3/8" Flare	12"
SFF-116-PP		16"
SFF-120-PP		20"
SFF-130-PP		30"
SFF-312-PP	1/2" FIP Soft Cone x 1/2" Flare	12"
SFF-316-PP		16"
SFF-320-PP		20"
SFF-330-PP		30"

TOILET CONNECTORS

PART NUMBER	DESCRIPTION	LENGTH
SFT-109-PP	7/8" Soft Cone Ballcock x 3/8" Flare	9"
SFT-112-PP		12"
SFT-116-PP		16"
SFT-120-PP		20"
SFT-309-PP	7/8" Soft Cone Ballcock x 1/2" Flare	9"
SFT-312-PP		12"
SFT-316-PP		16"
SFT-320-PP		20"
SWC-106-PP	7/8" Soft Cone Ballcock x 3/8" Soft Compression	6"
SWC-109-PP		9"
SWC-112-PP		12"
SWC-116-PP		16"
SWC-120-PP		20"
SWC-306-PP	7/8" Soft Cone Ballcock x 1/2" Compression Soft Cone	6"
SWC-309-PP		9"
SWC-312-PP		12"
SWC-316-PP		16"
SWC-320-PP		20"
SWC-406-PP	7/8" Soft Cone Ballcock x 1/2" FIP Soft Cone	6"
SWC-409-PP		9"
SWC-412-PP		12"
SWC-416-PP		16"
SWC-420-PP		20"
SWC-406-PP	7/8" Soft Cone Ballcock x 1/2" FIP Soft Cone	6"
SWC-409-PP		9"
SWC-412-PP		12"
SWC-416-PP		16"
SWC-420-PP		20"
KWC-109-PP	7/8" Soft Cone Ballcock x 3/8" Compression Hard Cone	9"
KWC-112-PP		12"
KWC-116-PP		16"
KWC-120-PP		20"
KWC-309-PP	7/8" Soft Cone Ballcock x 1/2" Compression Hard Cone	9"
KWC-312-PP		12"
KWC-316-PP		16"

LSP® PRODUCTS GROUP

3689 Arrowhead Drive, Carson City, NV 89706
Phone (800) 854-3215 Fax (800) 243-1777
E-mail sales@lspproducts.com Website www.lspproducts.com

Content matter is subject to change at any time. It is the user responsibility to ensure the most updated revisions are obtained.

AF/S-2010 (04-03) Rev 3

WC-2 TYPE A WATER CLOSET

TOTO®

CST244EF(R)

Entrada™ Close Coupled Toilet, 1.28GPF

FEATURES

- E-Max® flushing system, high efficiency (1.28GPF/4.8LPF)
- Elongated bowl
- Universal Height
- ADA compliant
- Close coupled, elongated front bowl and tank set, seat sold separately
- Chrome trip lever
- 12" Rough-in

MODELS

- CST244EF
- CST244EFR - Right-hand trip lever

COMPONENTS

- C244EF - Elongated Front Bowl
- ST243E - Tank and cover only - Left hand trip lever (shown in photo)
- ST243ER - Tank and cover only - Right hand trip lever
- SS114 SoftClose® seat (sold separately)

COLORS/FINISHES

- Standard
  #01 Cotton

PRODUCT SPECIFICATION

The two-piece, universal height, high efficiency E-Max flushing system toilet shall be 1.28GPF. Toilet shall have high-profile tank, elongated bowl and chrome trip lever. Toilet shall be ADA compliant and universal height. Toilet shall be **TOTO Model CST244EF___.**

E+ **E-Max**

CODES/STANDARDS

- Meets and exceeds ASME A112.19.2/CSA B45.1
- Certifications: IAPMO(cUPC)
- Code compliance: UPC, IPC, NSPC, NPC Canada, and others
- ADA compliant (when installed with trip lever located on the approach side)

WC-2 TYPE A WATER CLOSET

CST244EF(R)

Entrada™ Close Coupled Toilet, 1.28GPF

SPECIFICATIONS

- Water Use — 1.28 GPF (4.8 LPF)
- Flush System — E-Max
- Min. Water Pressure — 8 psi (flowing)
- Water Surface — 8-3/8" x 10-1/2"
- Trap Diameter — 2-1/8"
- Rough-in — 12"
- Trap Seal — 2-3/8"
- Warranty — One Year Limited Warranty
- Material — Vitreous china
- Shipping Weight — **C244EF** - 53lbs
  ST243E(R) - 24lbs
- Shipping Dimensions — **C244EF** - 28-1/2" x 16" W1 x 10-1/4" W2 x 17-3/4"
  ST243E(R) - 16-1/2" x 8-1/4" x 15-3/4"

INSTALLATION NOTES

Back-to-Back Toilet Installations:
TOTO recommends the use of a nationally listed, double sanitary tee-wye only, in vertical waste stacks, in accordance with the stipulations noted in the majority of nationally recognized plumbing codes.

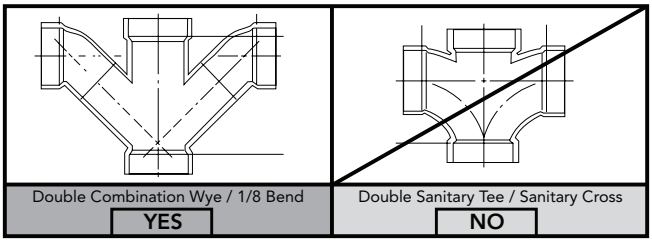

To maintain adequate wall gap between the back of the tank and wall, mount the floor flange at a nominal 12" rough-in distance.

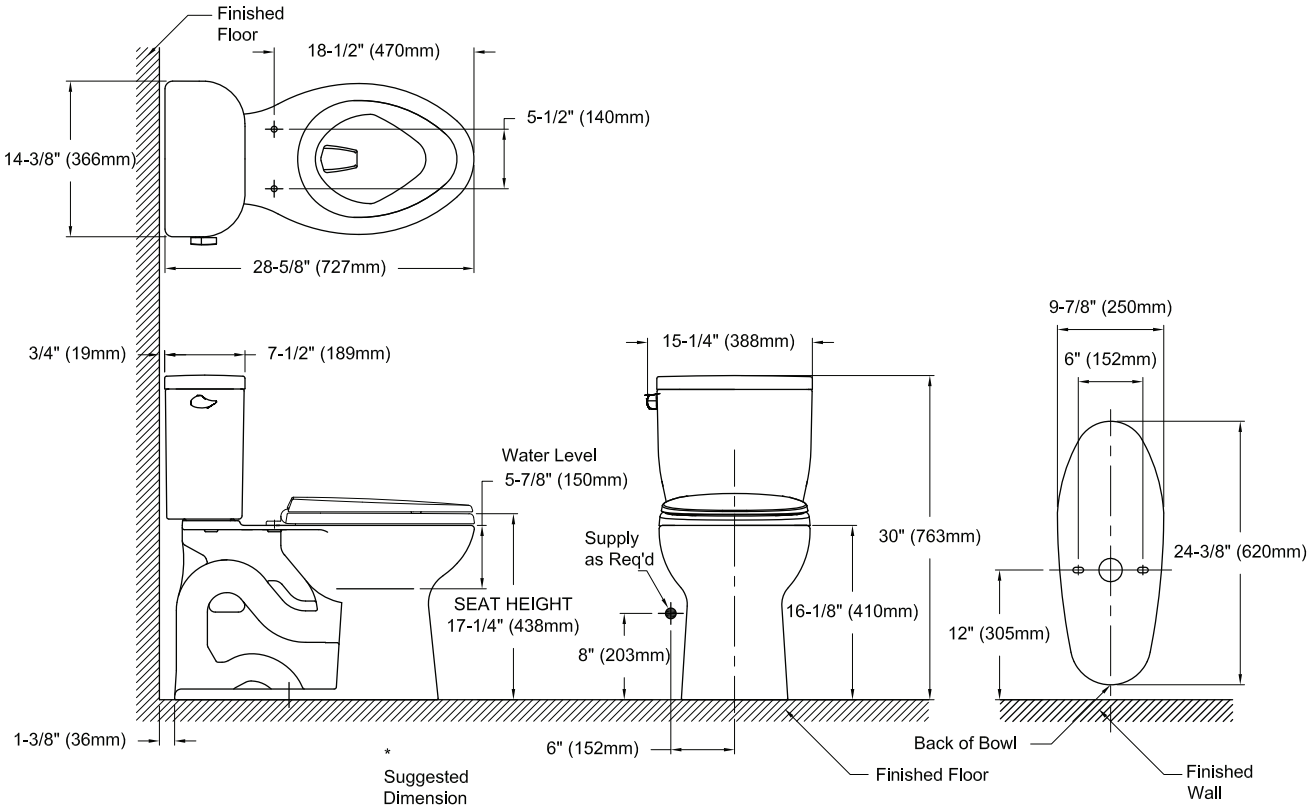

TOTO®

These dimensions and specifications are subject to change without notice

WC-2 TYPE A WATER CLOSET

RESIDENTIAL MOLDED WOOD TOILET SEAT

MODEL #	COLOR #
1500EC	WHITE

DESCRIPTION:

Closed front with cover, elongated, molded wood, multi-coat enamel finish toilet seat. Features two color-matched bumpers, color-matched Easy•Clean & Change® hinges with non-corrosive, top-tightening bolts and wing nuts.

SPECIFICATIONS:

Size:	Elongated
Material:	Molded Wood
Style:	Closed Front with Cover
Bumpers:	Two
Hinges:	Plastic Easy•Clean & Change®
Fastening System:	Non-Corrosive Bolts and Wing Nuts

PLASTIC EASY•CLEAN & CHANGE® HINGES

TWIST HINGES TO UNLOCK

FEATURES:

Easy•Clean & Change®

Non-Corrosive Bolts and Wing Nuts

EASY REMOVAL OF SEAT FOR THOROUGH CLEANING

NON-CORROSIVE BOLTS AND WING NUTS

DIMENSIONS:

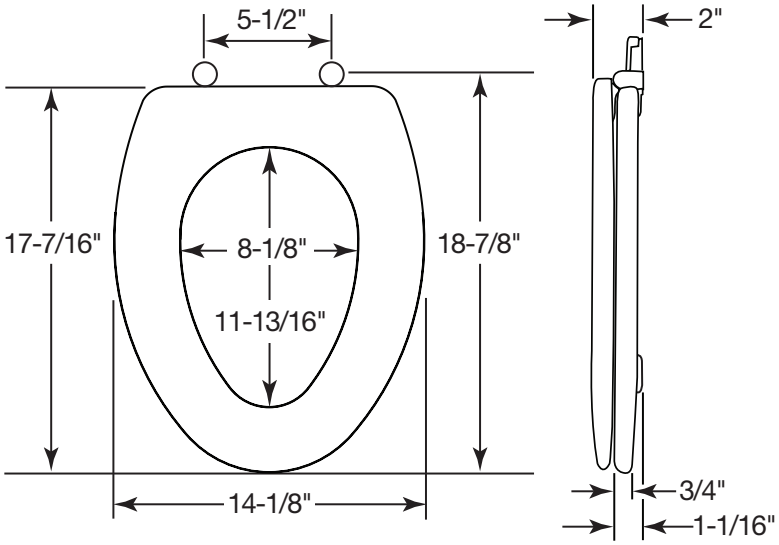

Proudly Made in the USA

Bemis Manufacturing Co., Sheboygan Falls, WI 53085
www.ToiletSeats.com

Phone: 800-558-7651 Fax: 800-292-3647

WC-2 TYPE A WATER CLOSET

AQUAFLO®

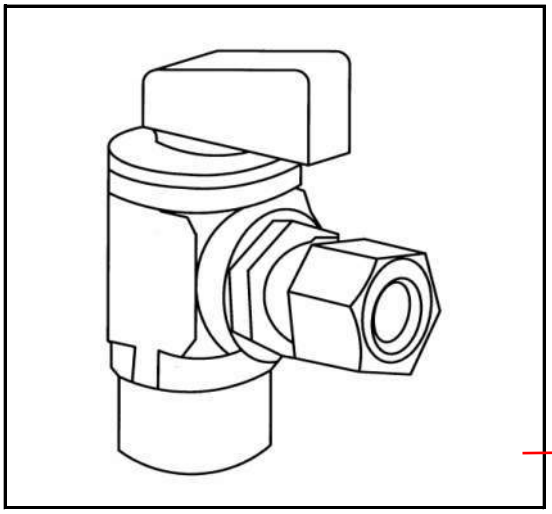

QUARTER-TURN ANGLE VALVES

Specification Sheet

NICKEL		
PART NUMBER	INLET	OUTLET
V-001-A	5/8" O.D. Compr	1/4" O.D. Compr
V-100-A	1/2" Sweat	3/8" O.D. Compr
V-101-A	5/8" O.D. Compr	3/8" O.D. Compr
V-102-A	1/2" F.I.P.	3/8" O.D. Compr
V-103-A	1/2" PEX	3/8" O.D. Compr
V-104-A	1/2" WIRSBO PEX	3/8" O.D. Compr
V-105-A	3/8" F.I.P.	3/8" O.D. Compr
V-106-A	3/8" O.D. Compr	3/8" O.D. Compr
V-107-A	1/2' F.I.P.	3/4" Hose Thread
V-300-A	1/2" Sweat	1/2" O.D. Compr
V-301-A	5/8" O.D. Compr	1/2" O.D. Compr
V-302-A	1/2" F.I.P.	1/2" O.D. Compr
V-303-A	1/2" PEX	1/2" O.D. Compr
V-400-A	1/2" Sweat	1/2" OR 7/16" Slip Joint
V-401-A	5/8" O.D. Compr	1/2" OR 7/16" Slip Joint
V-402-A	1/2" F.I.P.	1/2" OR 7/16" Slip Joint
V-403-A	1/2" PEX	1/2" M.I.P. / Sweat
V-500-A	1/2" CPVC	3/8" O.D. Compr
V-602-A	5/8" O.D. Compr	3/8" O.D. Compr.
POLISHED BRASS		
V-201-A	5/8" O.D. Compr	3/8" O.D. Compr
V-202-A	1/2" F.I.P.	3/8" O.D. Compr

For Lead Free product add "-LL" to the end of the part number.

DESIGN FEATURES

- Quick quarter-turn shut-off.
- Heavy duty brass construction ensures durability.
- Ball style valve will not freeze up.
- Teflon seats for extra wear resistnace.
- Pliable 0-rings will not distort or break down.
- One-year limited warranty

COMPLIANCES/LISTINGS

- IAPMO Certified
- NSF Compliant
- Meet or exceed ASME A112.18.1
- Federal Specification WWP 541E

Certified to NSF/ANSI 61

OPERATING SPECIFICATION

Temperature: 40-180ºF
Pressure: 125 PSI max.

Product Submittal	
Job Name	
Date	
Part Number	Quantity
Architect	
Contractor	

LSP PRODUCTS GROUP
3689 Arrowhead Drive, Carson City, NV 89706
Phone (800) 854-3215 Fax (800) 243-1777
E-mail sales@lspproducts.com Website www.lspproducts.com

Content matter is subject to change at any time. It is the user's responsibility to ensure the most updated revisions are obtained.

AF/S-2017 (05-11) Rev 3

WC-2 TYPE A WATER CLOSET

AQUAFLO®

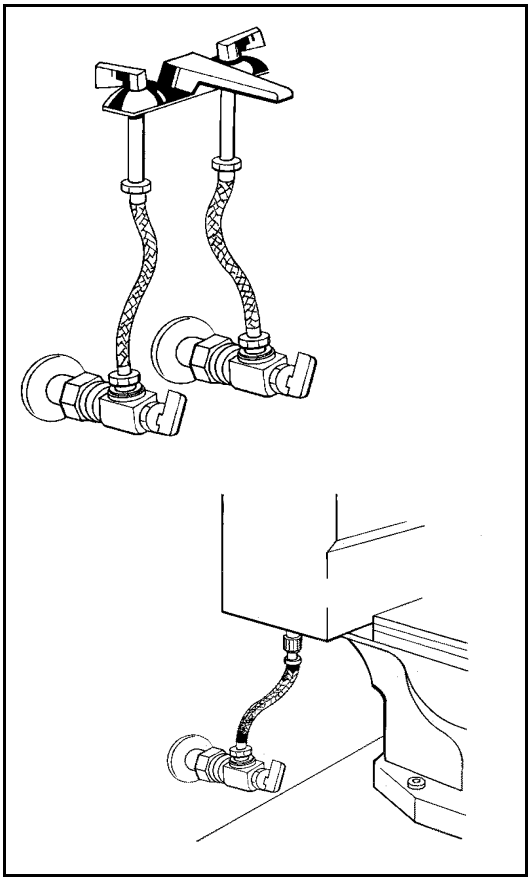

MIGHTYFLEX
STAINLESS STEEL CONNECTORS
Specification Sheet

DESIGN FEATURES
- Chloramine resistant soft cone.
- Exclusive POWR-TIGHT 12-point crimp-many times industry standard.
- Chloramine resistant tubing
- Withstands dramatic changes in water pressure
- Easy installation, no special tools required

COMPLIANCES/LISTINGS
- IAPMO Certified
- NSF Compliant
- ASME A112.18.6

MATERIAL SPECIFICATION
- Working Pressure: 160 psi Maximum
- Operating Temperature: 33°F-140°F
- Tubing: Reinforced PVC, NSF 61 Compliant
- Nuts & End fittings - Nickel Plated Brass
- Washers - NSF 61 Compliant

Product Submittal	
Job Name	
Date	
Part Number	Quantity
Architect	
Contractor	

LSP® PRODUCTS GROUP

3689 Arrowhead Drive, Carson City, NV 89706
Phone (800) 854-3215 Fax (800) 243-1777
E-mail sales@lspproducts.com Website www.lspproducts.com

Content matter is subject to change at any time. It is the user's responsibility to ensure the most updated revisions are obtained.

AF/S-2010 (04-08) Rev 4

WC-2 TYPE A WATER CLOSET

AQUAFLO®

MIGHTYFLEX
STAINLESS STEEL CONNECTORS
Specification Sheet

FAUCET CONNECTORS

PART NUMBER	DESCRIPTION	LENGTH
SFC-109-PP	1/2" FIP Soft Cone x 3/8" Soft Compression	9"
SFC-112-PP		12"
SFC-116-PP		16"
SFC-120-PP		20"
SFC-124-PP		24"
SFC-130-PP		30"
SFC-136-PP		36"
SFC-148-PP		48"
SFC-196-PP		96"
SFC-312-PP	1/2" FIP Soft Cone x 1/2" Compression Soft Cone	12"
SFC-316-PP		16"
SFC-320-PP		20"
SFC-324-PP		24"
SFC-330-PP		30"
SFC-348-PP		48"
SFC-409-PP	1/2' FIP Soft Cone x 1/2" FIP Soft Cone	9"
SFC-412-PP		12"
SFC-416-PP		16"
SFC-420-PP		20"
SFC-424-PP		24"
SFC-430-PP		30"
SFC-436-PP		36"
SFC-448-PP		48"
SFC-506-PP	3/8" Soft Compression x 3/8" Soft Compression	6"
SFC-509-PP		9"
SFC-512-PP		12"
SFC-516-PP		16"
SFC-520-PP		20"
SFC-524-PP		24"
SFC-530-PP		30"
SFC-548-PP		48"
SFC-572-PP		72"
SFF-112-PP	1/2" FIP Soft Cone x 3/8" Flare	12"
SFF-116-PP		16"
SFF-120-PP		20"
SFF-130-PP		30"
SFF-312-PP	1/2" FIP Soft Cone x 1/2" Flare	12"
SFF-316-PP		16"
SFF-320-PP		20"
SFF-330-PP		30"

TOILET CONNECTORS

PART NUMBER	DESCRIPTION	LENGTH
SFT-109-PP	7/8" Soft Cone Ballcock x 3/8" Flare	9"
SFT-112-PP		12"
SFT-116-PP		16"
SFT-120-PP		20"
SFT-309-PP	7/8" Soft Cone Ballcock x 1/2" Flare	9"
SFT-312-PP		12"
SFT-316-PP		16"
SFT-320-PP		20"
SWC-106-PP	7/8" Soft Cone Ballcock x 3/8" Soft Compression	6"
SWC-109-PP		9"
SWC-112-PP		12"
SWC-116-PP		16"
SWC-120-PP		20"
SWC-306-PP	7/8" Soft Cone Ballcock x 1/2" Compression Soft Cone	6"
SWC-309-PP		9"
SWC-312-PP		12"
SWC-316-PP		16"
SWC-320-PP		20"
SWC-406-PP	7/8" Soft Cone Ballcock x 1/2" FIP Soft Cone	6"
SWC-409-PP		9"
SWC-412-PP		12"
SWC-416-PP		16"
SWC-420-PP		20"
SWC-406-PP	7/8" Soft Cone Ballcock x 1/2" FIP Soft Cone	6"
SWC-409-PP		9"
SWC-412-PP		12"
SWC-416-PP		16"
SWC-420-PP		20"
KWC-109-PP	7/8" Soft Cone Ballcock x 3/8" Compression Hard Cone	9"
KWC-112-PP		12"
KWC-116-PP		16"
KWC-120-PP		20"
KWC-309-PP	7/8" Soft Cone Ballcock x 1/2" Compression Hard Cone	9"
KWC-312-PP		12"
KWC-316-PP		16"

LSP® PRODUCTS GROUP

3689 Arrowhead Drive, Carson City, NV 89706
Phone (800) 854-3215 Fax (800) 243-1777
E-mail sales@lspproducts.com Website www.lspproducts.com

Content matter is subject to change at any time. It is the user responsibility to ensure the most updated revisions are obtained.

AF/S-2010 (04-03) Rev 3

WC-3 COMMON AREA WATER CLOSET

TOTO®

CST244EF(R)

Entrada™ Close Coupled Toilet, 1.28GPF

FEATURES

- E-Max® flushing system, high efficiency (1.28GPF/4.8LPF)
- Elongated bowl
- Universal Height
- ADA compliant
- Close coupled, elongated front bowl and tank set, seat sold separately
- Chrome trip lever
- 12" Rough-in

MODELS

- CST244EF
- CST244EFR - Right-hand trip lever

COMPONENTS

- C244EF - Elongated Front Bowl
- ST243E - Tank and cover only - Left hand trip lever (shown in photo)
- ST243ER - Tank and cover only - Right hand trip lever
- SS114 SoftClose® seat (sold separately)

COLORS/FINISHES

- Standard
  #01 Cotton

PRODUCT SPECIFICATION

The two-piece, universal height, high efficiency E-Max flushing system toilet shall be 1.28GPF. Toilet shall have high-profile tank, elongated bowl and chrome trip lever. Toilet shall be ADA compliant and universal height. Toilet shall be **TOTO Model CST244EF___.**

E+ E-Max

CODES/STANDARDS

- Meets and exceeds ASME A112.19.2/CSA B45.1
- Certifications: IAPMO(cUPC)
- Code compliance: UPC, IPC, NSPC, NPC Canada, and others
- ADA compliant (when installed with trip lever located on the approach side)

WC-3 COMMON AREA WATER CLOSET

CST244EF(R)

Entrada™ Close Coupled Toilet, 1.28GPF

SPECIFICATIONS

- Water Use — 1.28 GPF (4.8 LPF)
- Flush System — E-Max
- Min. Water Pressure — 8 psi (flowing)
- Water Surface — 8-3/8" x 10-1/2"
- Trap Diameter — 2-1/8"
- Rough-in — 12"
- Trap Seal — 2-3/8"
- Warranty — One Year Limited Warranty
- Material — Vitreous china
- Shipping Weight — **C244EF** - 53lbs; **ST243E(R)** - 24lbs
- Shipping Dimensions — **C244EF** - 28-1/2" x 16" W1 x 10-1/4" W2 x 17-3/4"; **ST243E(R)** - 16-1/2" x 8-1/4" x 15-3/4"

INSTALLATION NOTES

Back-to-Back Toilet Installations:
TOTO recommends the use of a nationally listed, double sanitary tee-wye only, in vertical waste stacks, in accordance with the stipulations noted in the majority of nationally recognized plumbing codes.

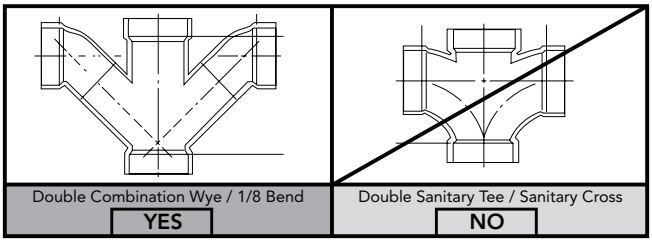

To maintain adequate wall gap between the back of the tank and wall, mount the floor flange at a nominal 12" rough-in distance.

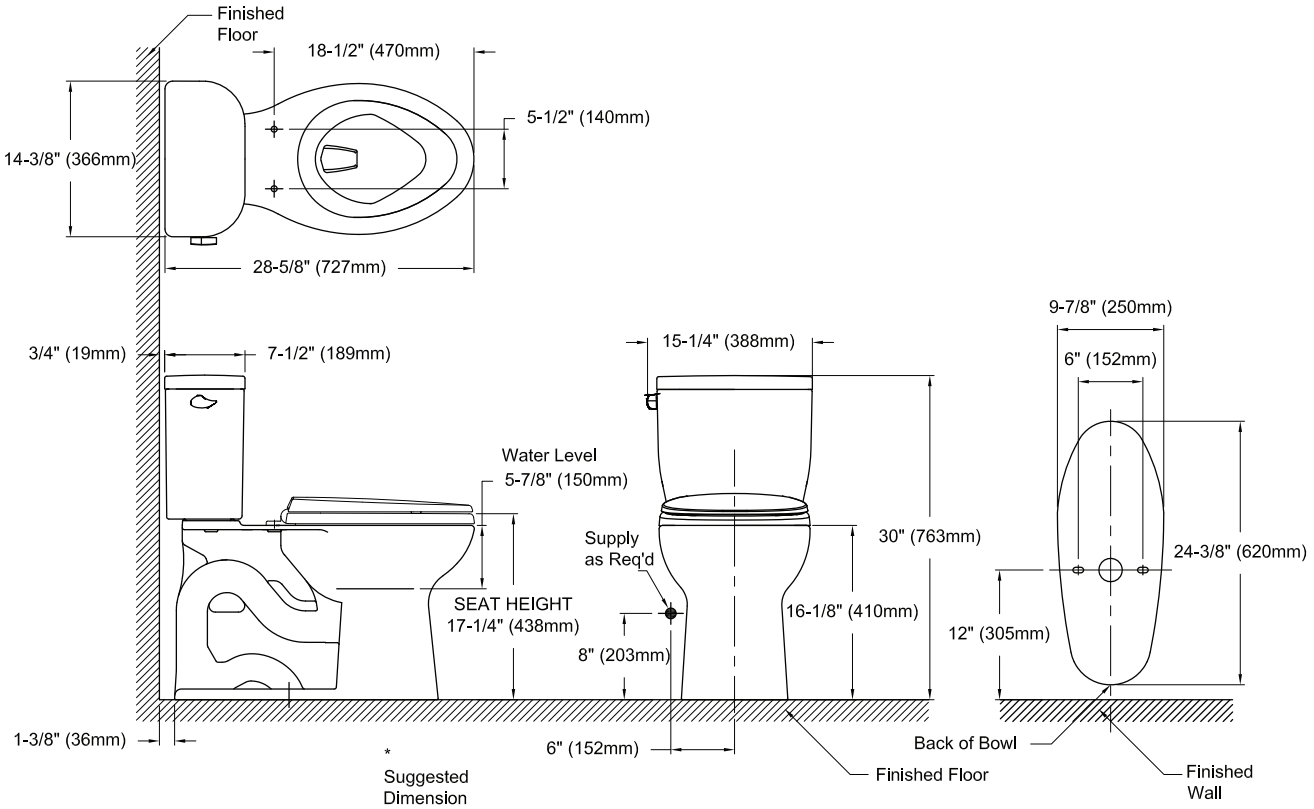

TOTO®

These dimensions and specifications are subject to change without notice

WC-3 COMMON AREA WATER CLOSET

COMMERCIAL HEAVY-DUTY PLASTIC TOILET SEAT

MODEL #	COLOR #
1955CT/1955SSCT	_____

DESCRIPTION:

Open front less cover, elongated, heavy-duty, injection molded solid plastic toilet seat. Features four molded-in bumpers, non self-sustaining (1955CT) or self-sustaining (1955SSCT) check hinges with non-corrosive 300 Series stainless steel posts and pintles and STA-TITE® Commercial Fastening System™. This seat complies with IAPMO/ANSI Z124.5-2013 Plastic Toilet Seats as a class Commercial Heavy Duty.

SPECIFICATIONS:

Size:	Elongated
Material:	Plastic
Style:	Open Front less Cover
Bumpers:	Four
Hinges:	Plastic Non Self-Sustaining (1955CT) or Self-Sustaining (1955SSCT) with 300 Series Stainless Steel Posts and Pintles
Fastening System:	STA-TITE® Commercial Fastening System™

PLASTIC HINGES WITH STAINLESS STEEL POSTS AND PINTLES

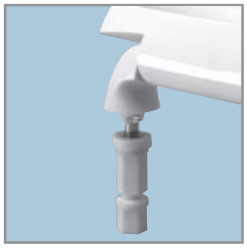

STA-TITE® COMMERCIAL FASTENING SYSTEM™

FEATURES:

STA-TITE® Commercial Fastening System™

Non-Corrosive 300 Series Stainless Steel Posts and Pintles

DIMENSIONS:

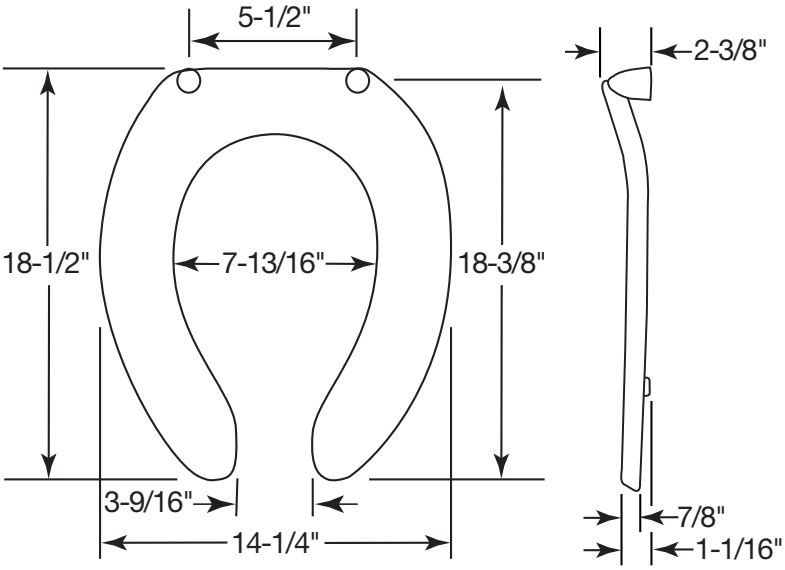

Proudly Made in the USA

Bemis Manufacturing Co., Sheboygan Falls, WI 53085
www.ToiletSeats.com

Phone: 800-558-7651 Fax: 800-292-3647

WC-3 COMMON AREA WATER CLOSET

AQUAFLO®

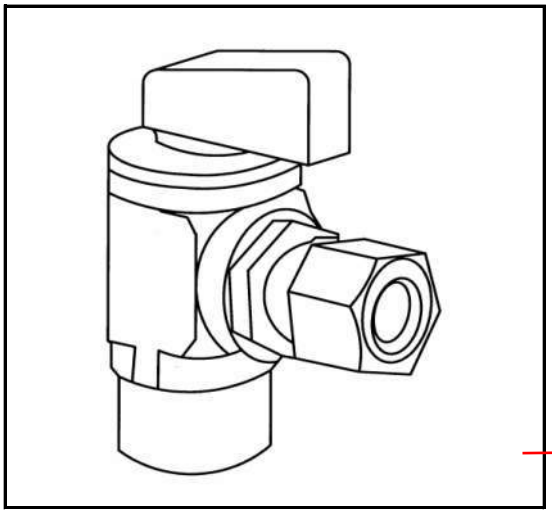

QUARTER-TURN ANGLE VALVES

Specification Sheet

NICKEL		
PART NUMBER	INLET	OUTLET
V-001-A	5/8" O.D. Compr	1/4" O.D. Compr
V-100-A	1/2" Sweat	3/8" O.D. Compr
V-101-A	5/8" O.D. Compr	3/8" O.D. Compr
V-102-A	1/2" F.I.P.	3/8" O.D. Compr
V-103-A	1/2" PEX	3/8" O.D. Compr
V-104-A	1/2" WIRSBO PEX	3/8" O.D. Compr
V-105-A	3/8" F.I.P.	3/8" O.D. Compr
V-106-A	3/8" O.D. Compr	3/8" O.D. Compr
V-107-A	1/2' F.I.P.	3/4" Hose Thread
V-300-A	1/2" Sweat	1/2" O.D. Compr
V-301-A	5/8" O.D. Compr	1/2" O.D. Compr
V-302-A	1/2" F.I.P.	1/2" O.D. Compr
V-303-A	1/2" PEX	1/2" O.D. Compr
V-400-A	1/2" Sweat	1/2" OR 7/16" Slip Joint
V-401-A	5/8" O.D. Compr	1/2" OR 7/16" Slip Joint
V-402-A	1/2" F.I.P.	1/2" OR 7/16" Slip Joint
V-403-A	1/2" PEX	1/2" M.I.P. / Sweat
V-500-A	1/2" CPVC	3/8" O.D. Compr
V-602-A	5/8" O.D. Compr	3/8" O.D. Compr.
POLISHED BRASS		
V-201-A	5/8" O.D. Compr	3/8" O.D. Compr
V-202-A	1/2" F.I.P.	3/8" O.D. Compr

For Lead Free product add "-LL" to the end of the part number.

DESIGN FEATURES

- Quick quarter-turn shut-off.
- Heavy duty brass construction ensures durability.
- Ball style valve will not freeze up.
- Teflon seats for extra wear resistnace.
- Pliable 0-rings will not distort or break down.
- One-year limited warranty

COMPLIANCES/LISTINGS

- IAPMO Certified
- NSF Compliant
- Meet or exceed ASME A112.18.1
- Federal Specification WWP 541E

Certified to NSF/ANSI 61

UPC

OPERATING SPECIFICATION

Temperature: 40-180ºF
Pressure: 125 PSI max.

Product Submittal	
Job Name	
Date	
Part Number	Quantity
Architect	
Contractor	

LSP PRODUCTS GROUP
3689 Arrowhead Drive, Carson City, NV 89706
Phone (800) 854-3215 Fax (800) 243-1777
E-mail sales@lspproducts.com Website www.lspproducts.com

Content matter is subject to change at any time. It is the user's responsibility to ensure the most updated revisions are obtained.

AF/S-2017 (05-11) Rev 3

WC-3 COMMON AREA WATER CLOSET

AQUAFLO®

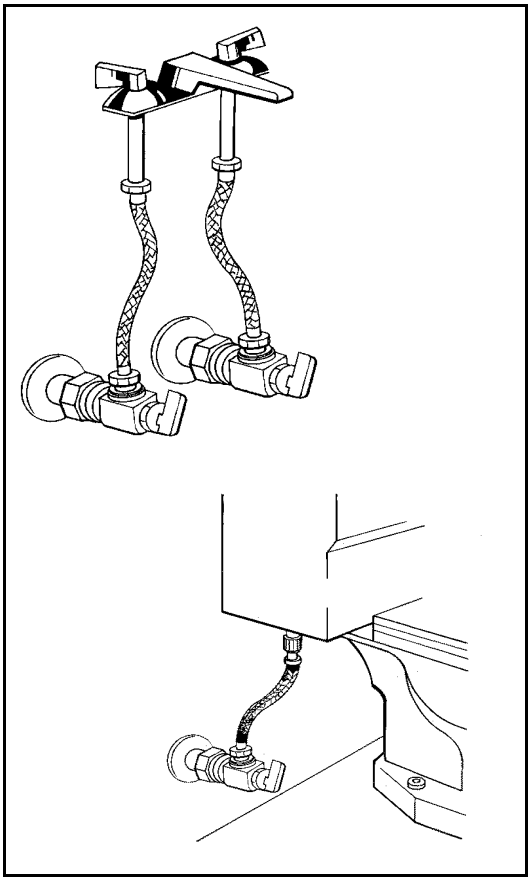

MIGHTYFLEX
STAINLESS STEEL CONNECTORS
Specification Sheet

DESIGN FEATURES
- Chloramine resistant soft cone.
- Exclusive POWR-TIGHT 12-point crimp-many times industry standard.
- Chloramine resistant tubing
- Withstands dramatic changes in water pressure
- Easy installation, no special tools required

COMPLIANCES/LISTINGS
- IAPMO Certified
- NSF Compliant
- ASME A112.18.6

MATERIAL SPECIFICATION
- Working Pressure: 160 psi Maximum
- Operating Temperature: 33°F-140°F
- Tubing: Reinforced PVC, NSF 61 Compliant
- Nuts & End fittings - Nickel Plated Brass
- Washers - NSF 61 Compliant

Product Submittal	
Job Name	
Date	
Part Number	Quantity
Architect	
Contractor	

LSP® PRODUCTS GROUP

3689 Arrowhead Drive, Carson City, NV 89706
Phone (800) 854-3215 Fax (800) 243-1777
E-mail sales@lspproducts.com Website www.lspproducts.com

Content matter is subject to change at any time. It is the user's responsibility to ensure the most updated revisions are obtained.

AF/S-2010 (04-08) Rev 4

WC-3 COMMON AREA WATER CLOSET

AQUAFLO®

MIGHTYFLEX
STAINLESS STEEL CONNECTORS
Specification Sheet

FAUCET CONNECTORS

PART NUMBER	DESCRIPTION	LENGTH
SFC-109-PP	1/2" FIP Soft Cone x 3/8" Soft Compression	9"
SFC-112-PP		12"
SFC-116-PP		16"
SFC-120-PP		20"
SFC-124-PP		24"
SFC-130-PP		30"
SFC-136-PP		36"
SFC-148-PP		48"
SFC-196-PP		96"
SFC-312-PP	1/2" FIP Soft Cone x 1/2" Compression Soft Cone	12"
SFC-316-PP		16"
SFC-320-PP		20"
SFC-324-PP		24"
SFC-330-PP		30"
SFC-348-PP		48"
SFC-409-PP	1/2' FIP Soft Cone x 1/2" FIP Soft Cone	9"
SFC-412-PP		12"
SFC-416-PP		16"
SFC-420-PP		20"
SFC-424-PP		24"
SFC-430-PP		30"
SFC-436-PP		36"
SFC-448-PP		48"
SFC-506-PP	3/8" Soft Compression x 3/8" Soft Compression	6"
SFC-509-PP		9"
SFC-512-PP		12"
SFC-516-PP		16"
SFC-520-PP		20"
SFC-524-PP		24"
SFC-530-PP		30"
SFC-548-PP		48"
SFC-572-PP		72"
SFF-112-PP	1/2" FIP Soft Cone x 3/8" Flare	12"
SFF-116-PP		16"
SFF-120-PP		20"
SFF-130-PP		30"
SFF-312-PP	1/2" FIP Soft Cone x 1/2" Flare	12"
SFF-316-PP		16"
SFF-320-PP		20"
SFF-330-PP		30"

TOILET CONNECTORS

PART NUMBER	DESCRIPTION	LENGTH
SFT-109-PP	7/8" Soft Cone Ballcock x 3/8" Flare	9"
SFT-112-PP		12"
SFT-116-PP		16"
SFT-120-PP		20"
SFT-309-PP	7/8" Soft Cone Ballcock x 1/2" Flare	9"
SFT-312-PP		12"
SFT-316-PP		16"
SFT-320-PP		20"
SWC-106-PP	7/8" Soft Cone Ballcock x 3/8" Soft Compression	6"
SWC-109-PP		9"
SWC-112-PP		12"
SWC-116-PP		16"
SWC-120-PP		20"
SWC-306-PP	7/8" Soft Cone Ballcock x 1/2" Compression Soft Cone	6"
SWC-309-PP		9"
SWC-312-PP		12"
SWC-316-PP		16"
SWC-320-PP		20"
SWC-406-PP	7/8" Soft Cone Ballcock x 1/2" FIP Soft Cone	6"
SWC-409-PP		9"
SWC-412-PP		12"
SWC-416-PP		16"
SWC-420-PP		20"
SWC-406-PP	7/8" Soft Cone Ballcock x 1/2" FIP Soft Cone	6"
SWC-409-PP		9"
SWC-412-PP		12"
SWC-416-PP		16"
SWC-420-PP		20"
KWC-109-PP	7/8" Soft Cone Ballcock x 3/8" Compression Hard Cone	9"
KWC-112-PP		12"
KWC-116-PP		16"
KWC-120-PP		20"
KWC-309-PP	7/8" Soft Cone Ballcock x 1/2" Compression Hard Cone	9"
KWC-312-PP		12"
KWC-316-PP		16"

LSP® PRODUCTS GROUP

3689 Arrowhead Drive, Carson City, NV 89706
Phone (800) 854-3215 Fax (800) 243-1777
E-mail sales@lspproducts.com Website www.lspproducts.com

Content matter is subject to change at any time. It is the user responsibility to ensure the most updated revisions are obtained.

AF/S-2010 (04-03) Rev 3

L-1 TYPE B LAVATORY

TOTO®

LT221

Atherton™ Rectangular Undercounter Lavatory

FEATURES

- 17"x 13"
- Rectangular Undercounter Lavatory
- ADA compliant
- Vitreous china
- Front overflow
- Mounting assembly complete with installation template and mounting screw set for wood countertops
- THU410 is required for marble/granite type counter top installation and must be purchased separately

MODELS

- LT221
  (#01)

COLORS/FINISHES

- #01 Cotton

CODES/STANDARDS

- Meets ADA guidelines and ANSI A117.1 requirements when countertop is installed 864mm (34") from finished floor and lavatory is installed 47mm (1 7/8") minimum from front edge.
- Meets and exceeds ASME A112.19.2/CSA B45.1
- Certifications: IAPMO(cUPC), State of Massachusetts, City of Los Angeles, and others

PRODUCT SPECIFICATION

The undercounter lavatory shall be made of vitreous china. Lavatory shall be 17-3/4"in width and 13-3/8" in depth. Product shall be with overflow and lavatory shall include mounting assembly and be ADA compliant.
TOTO Model LT221_____.

L-1 TYPE B LAVATORY

LT221

Atherton™ Rectangular Undercounter Lavatory

SPECIFICATIONS

- **Waste:** 1-1/4" (32 mm)
- **Overall Size:** 21-3/8" (544mm) x 16-3/8" (417mm)
- **Cutout:** 17(432mm) x 12-5/8"(321mm)
- **Basin Depth:** 4″ (103 mm)
- **Basin:** 17-3/4" (452mm) x 13-3/8" (339mm)
- **Warranty:** One Year Limited Warranty
- **Material:** Vitreous china
- **Shipping Weight:** 23lbs (10.4 kg)
- **Shipping Dimensions:** 22-1/4" x 17-3/8" x 7-1/8″

INSTALLATION NOTES

Mounting Hardware

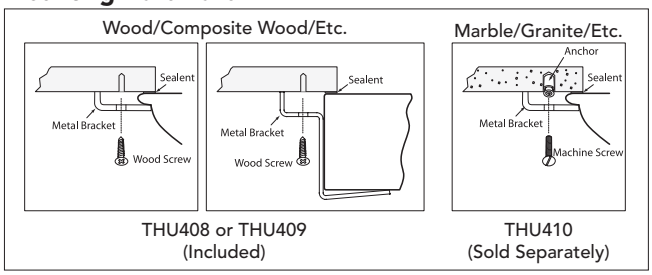

Note: Low flow faucets are recommended.

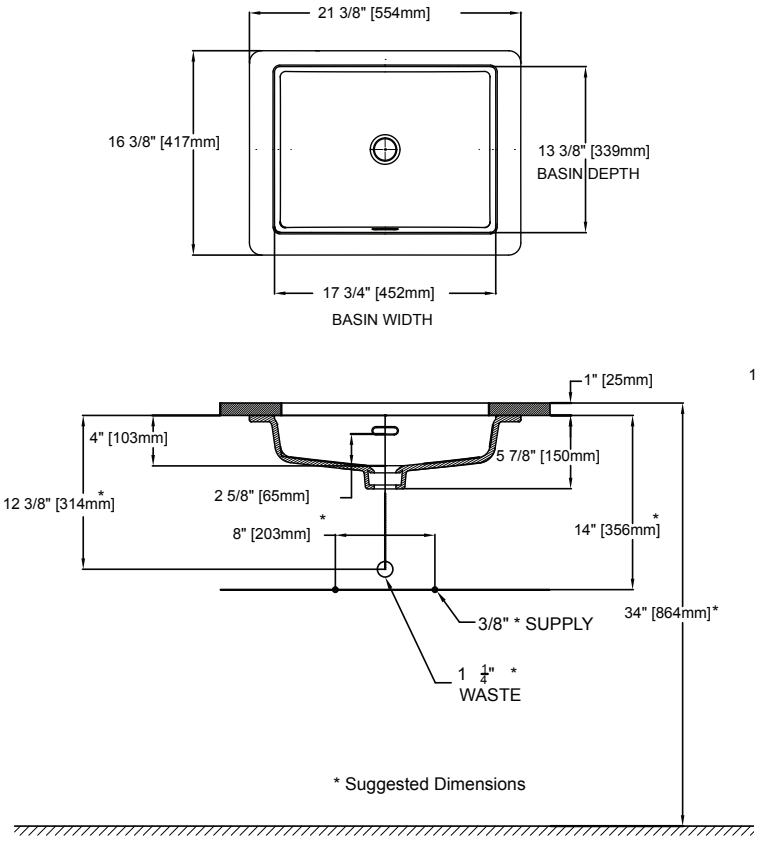

ADA COMPLIANCE CHECK

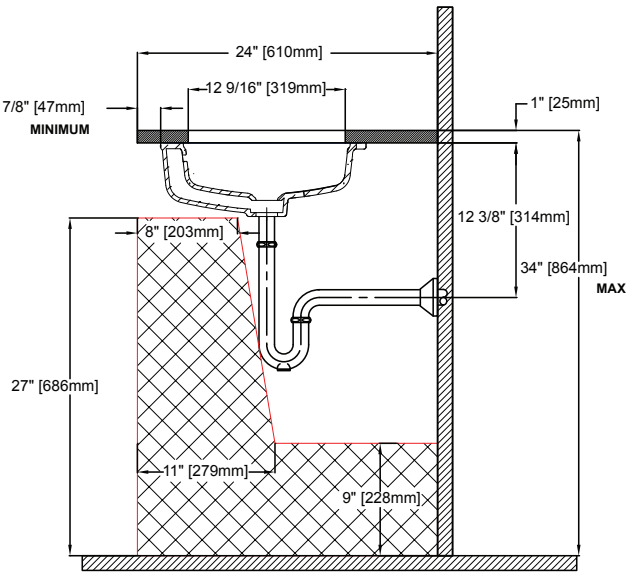

TOTO®

These dimensions and specifications are subject to change without notice.

L-1 TYPE B LAVATORY

CONCETTO
Lavatory Centerset
S-Size

MODEL # 34270001

Pure Freude an Wasser

GROHE

GROHE America, Inc | 200 North Gary Avenue, Suite G, Roselle, IL 60172
Phone: +1 (800) 444-7643 | Fax: +1 (800) 225-2778 | us-customerservice@grohe.com

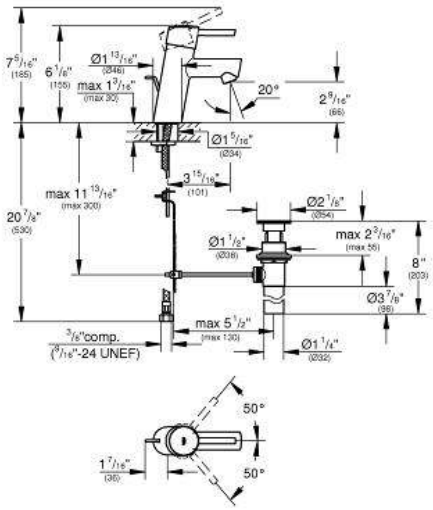

Product Description:
Lavatory Centerset
S-Size

Standard Specification:
- **GROHE EcoJoy®** technology for less water and perfect flow
- Single hole installation
- Metal lever handle
- **GROHE SilkMove** 28 mm ceramic cartridge
- **GROHE StarLight®** finish
- Flow control
- 1 1/4" pop-up waste set
- Stainless steel flex lines
- **GROHE QuickFix®** installation system with centering support
- Temperature limiter
- Max Flow Rate: 1.5 gpm (5.7 L/min)

Applicable Codes & Standards:
- Energy Policy Act of 1992
- NSF 61
- ASME A112.18.1/CSA B125.1
- US Federal and State material regulations
- EPA WaterSense®
- ICC/ANSI A117.1
- CalGreen

Color:
❑ 34270001 001 chrome

L-1 TYPE B LAVATORY

Dearborn® Brass
4675 W. 160th St.
Cleveland, Ohio 44135
Ph: (800) 321-9532
Fax: (800) 321-9535
www.dearbornbrass.com

SUBMITTAL SPECIFICATION

PLASTIC TUBULAR
1-½" P-TRAP WITH THREADED ADAPTER

Engineering Specification: Dearborn Brass Plastic Tubular 1-½" P-Traps with Threaded Adapter are designed for use in tubular drain applications. Options include PVC or ABS plastic adapter and True Blue Premium Washers for superior sealing. Available in white or black polypropylene plastic.

Job Reference

DESCRIPTION

- Made of polypropylene plastic
- Plastic Tubular P-Trap with Threaded Adapter
  - Plastic Tubular Quarter Bend
  - Plastic Tubular J-Bend
  - Schedule 40 Threaded Adapter
  - (3) Slip Joint Nuts
  - (1) 1-½" Washer
  - (1) 1-¼" x 1-½" Reducing Washer
- Reversible P-Trap includes reversible J-Bend
- Deep Flange P-Trap includes plastic deep flange

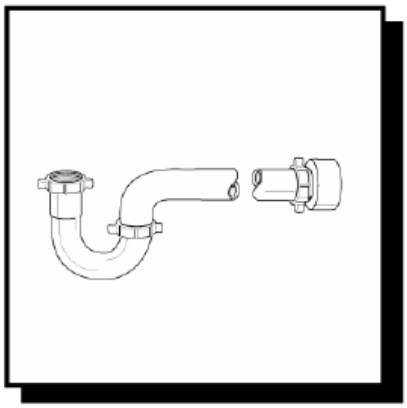

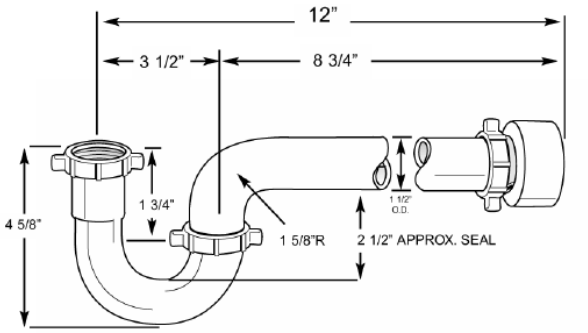

- Meets ASTM F 409
- IAPMO Listed

✓	Product No.	Description	Carton Quantity	Carton Weight (lbs)
	P9703W	1-½" P-Trap w/ Threaded PVC Adapter with True Blue Premium Washers – White		
	P9703BG	1-½" P-Trap w/ Threaded PVC Adapter & Reversible J-Bend – White, Bagged	25	19.4
	A9703WBG	1-½" P-Trap w/ Threaded PVC Adapter & Reversible J-Bend with True Blue Premium Washers –Black, Bagged	25	19.4
▶	P9704	1-½" P-Trap w/ Threaded PVC Adapter – White	25	11.8
	A9704	1-½" P-Trap w/ Threaded ABS Adapter – Black	25	11.7
	P9704A	1-½" P-Trap w/ Threaded ABS Adapter – White	25	11.8
	P9704AB	1-½" P-Trap w/ Threaded ABS Adapter – White, Bagged	25	19.2
	P9704BG	1-½" P-Trap w/ Threaded PVC Adapter – White, Bagged	25	19.4
	P9704AWB	1-½" P-Trap w/ Threaded ABS Adapter & Reversible J-Bend with True Blue Premium Washers – White, Bagged	25	19.4
	A9704B	1-½" P-Trap w/ Threaded ABS Adapter – Black, Bagged	25	19.3
	P9704DF	1-½" P-Trap w/ Threaded PVC Adapter & Deep Flange– White	25	12.8
	A9704DF	1-½" P-Trap w/ Threaded ABS Adapter & Deep Flange – Black	25	12.6
	P9704DFB	1-½" P-Trap w/ Threaded PVC Adapter & Deep Flange – White, Bagged	25	21.2
	A9704WB	1-½" P-Trap w/ Threaded ABS Adapter & Reversible J-Bend with True Blue Premium Washers – Black, Bagged	25	19.4

L-1 TYPE B LAVATORY

AQUAFLO®

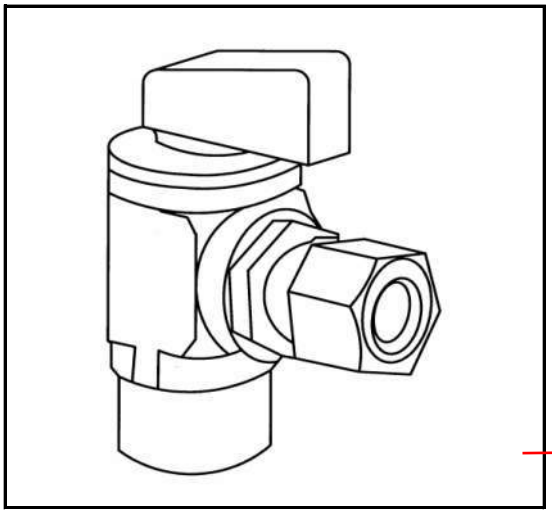

QUARTER-TURN ANGLE VALVES

Specification Sheet

NICKEL		
PART NUMBER	INLET	OUTLET
V-001-A	5/8" O.D. Compr	1/4" O.D. Compr
V-100-A	1/2" Sweat	3/8" O.D. Compr
V-101-A	5/8" O.D. Compr	3/8" O.D. Compr
V-102-A	1/2" F.I.P.	3/8" O.D. Compr
V-103-A	1/2" PEX	3/8" O.D. Compr
V-104-A	1/2" WIRSBO PEX	3/8" O.D. Compr
V-105-A	3/8" F.I.P.	3/8" O.D. Compr
V-106-A	3/8" O.D. Compr	3/8" O.D. Compr
V-107-A	1/2' F.I.P.	3/4" Hose Thread
V-300-A	1/2" Sweat	1/2" O.D. Compr
V-301-A	5/8" O.D. Compr	1/2" O.D. Compr
V-302-A	1/2" F.I.P.	1/2" O.D. Compr
V-303-A	1/2" PEX	1/2" O.D. Compr
V-400-A	1/2" Sweat	1/2" OR 7/16" Slip Joint
V-401-A	5/8" O.D. Compr	1/2" OR 7/16" Slip Joint
V-402-A	1/2" F.I.P.	1/2" OR 7/16" Slip Joint
V-403-A	1/2" PEX	1/2" M.I.P. / Sweat
V-500-A	1/2" CPVC	3/8" O.D. Compr
V-602-A	5/8" O.D. Compr	3/8" O.D. Compr.
POLISHED BRASS		
V-201-A	5/8" O.D. Compr	3/8" O.D. Compr
V-202-A	1/2" F.I.P.	3/8" O.D. Compr

For Lead Free product add "-LL" to the end of the part number.

DESIGN FEATURES

- Quick quarter-turn shut-off.
- Heavy duty brass construction ensures durability.
- Ball style valve will not freeze up.
- Teflon seats for extra wear resistnace.
- Pliable 0-rings will not distort or break down.
- One-year limited warranty

COMPLIANCES/LISTINGS

- IAPMO Certified
- NSF Compliant
- Meet or exceed ASME A112.18.1
- Federal Specification WWP 541E

Certified to NSF/ANSI 61

OPERATING SPECIFICATION

Temperature: 40-180ºF
Pressure: 125 PSI max.

Product Submittal	
Job Name	
Date	
Part Number	Quantity
Architect	
Contractor	

LSP PRODUCTS GROUP
3689 Arrowhead Drive, Carson City, NV 89706
Phone (800) 854-3215 Fax (800) 243-1777
E-mail sales@lspproducts.com Website www.lspproducts.com

Content matter is subject to change at any time. It is the user's responsibility to ensure the most updated revisions are obtained.

AF/S-2017 (05-11) Rev 3

L-2 TYPE A LAVATORY

TOTO®

LT221

Atherton™ Rectangular Undercounter Lavatory

FEATURES

- 17"x 13"
- Rectangular Undercounter Lavatory
- ADA compliant
- Vitreous china
- Front overflow
- Mounting assembly complete with installation template and mounting screw set for wood countertops
- THU410 is required for marble/granite type counter top installation and must be purchased separately

MODELS

- LT221
  (#01)

COLORS/FINISHES

- #01 Cotton

CODES/STANDARDS

- Meets ADA guidelines and ANSI A117.1 requirements when countertop is installed 864mm (34") from finished floor and lavatory is installed 47mm (1 7/8") minimum from front edge.
- Meets and exceeds ASME A112.19.2/CSA B45.1
- Certifications: IAPMO(cUPC), State of Massachusetts, City of Los Angeles, and others

PRODUCT SPECIFICATION

The undercounter lavatory shall be made of vitreous china. Lavatory shall be 17-3/4"in width and 13-3/8" in depth. Product shall be with overflow and lavatory shall include mounting assembly and be ADA compliant.
TOTO Model LT221_____.

L-2 TYPE A LAVATORY

LT221

Atherton™ Rectangular Undercounter Lavatory

SPECIFICATIONS

- **Waste:** 1-1/4" (32 mm)
- **Overall Size:** 21-3/8" (544mm) x 16-3/8" (417mm)
- **Cutout:** 17(432mm) x 12-5/8"(321mm)
- **Basin Depth:** 4″ (103 mm)
- **Basin:** 17-3/4" (452mm) x 13-3/8" (339mm)
- **Warranty:** One Year Limited Warranty
- **Material:** Vitreous china
- **Shipping Weight:** 23lbs (10.4 kg)
- **Shipping Dimensions:** 22-1/4" x 17-3/8" x 7-1/8″

INSTALLATION NOTES

Mounting Hardware

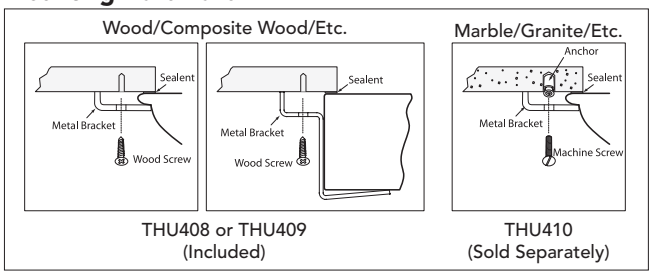

Note: Low flow faucets are recommended.

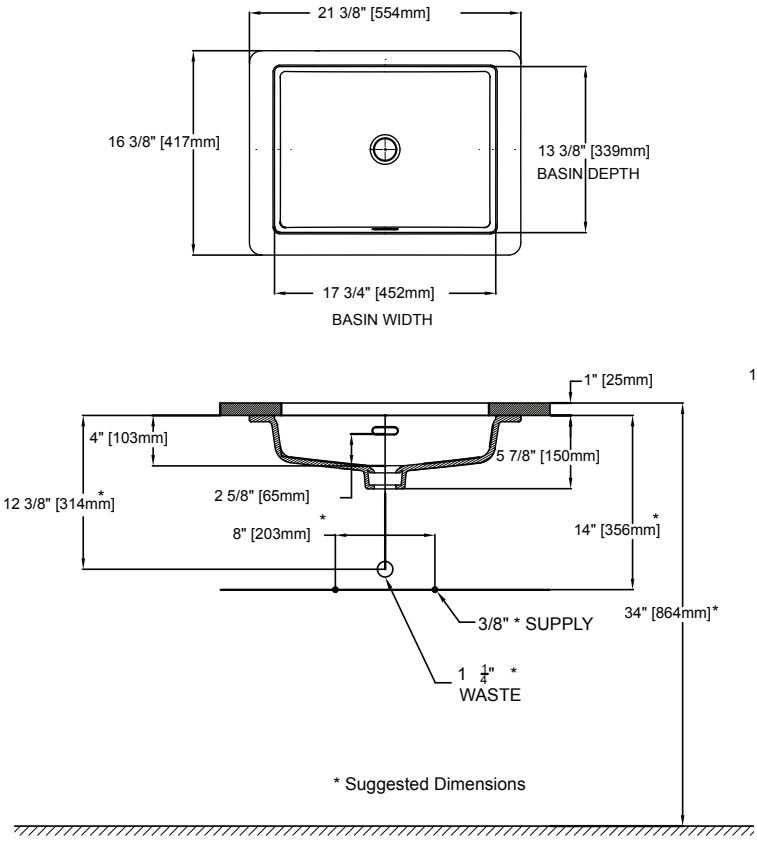

ADA COMPLIANCE CHECK

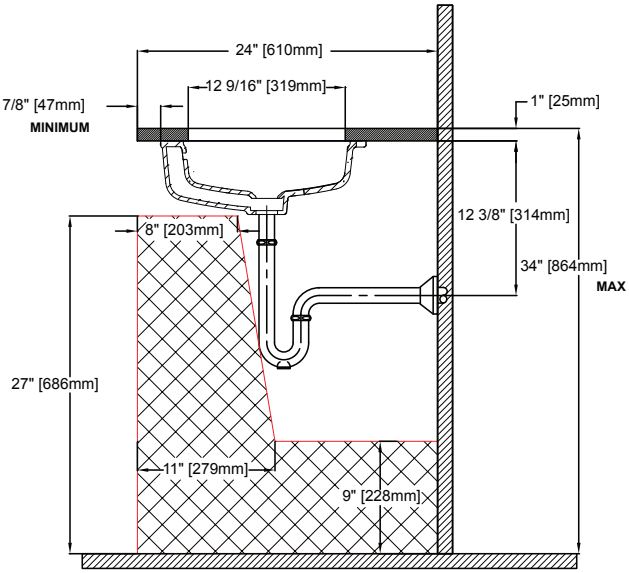

TOTO®

These dimensions and specifications are subject to change without notice.

L-2 TYPE A LAVATORY

CONCETTO
Lavatory Centerset
S-Size

MODEL # 34270001

Pure Freude an Wasser

GROHE

GROHE America, Inc | 200 North Gary Avenue, Suite G, Roselle, IL 60172
Phone: +1 (800) 444-7643 | Fax: +1 (800) 225-2778 | us-customerservice@grohe.com

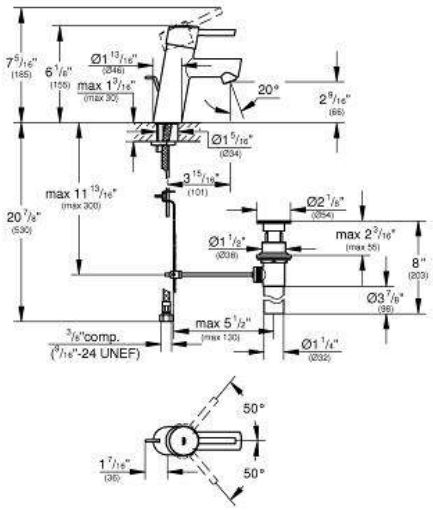

Product Description:
Lavatory Centerset
S-Size

Standard Specification:
- **GROHE EcoJoy®** technology for less water and perfect flow
- Single hole installation
- Metal lever handle
- **GROHE SilkMove** 28 mm ceramic cartridge
- **GROHE StarLight®** finish
- Flow control
- 1 1/4" pop-up waste set
- Stainless steel flex lines
- **GROHE QuickFix®** installation system with centering support
- Temperature limiter
- Max Flow Rate: 1.5 gpm (5.7 L/min)

Applicable Codes & Standards:
- Energy Policy Act of 1992
- NSF 61
- ASME A112.18.1/CSA B125.1
- US Federal and State material regulations
- EPA WaterSense®
- ICC/ANSI A117.1
- CalGreen

Color:
❑ 34270001 001 chrome

L-2 TYPE A LAVATORY

Dearborn® Brass
4675 W. 160th St.
Cleveland, Ohio 44135
Ph: (800) 321-9532
Fax: (800) 321-9535
www.dearbornbrass.com

SUBMITTAL SPECIFICATION

PLASTIC TUBULAR
1-½" P-TRAP WITH THREADED ADAPTER

Engineering Specification: Dearborn Brass Plastic Tubular 1-½" P-Traps with Threaded Adapter are designed for use in tubular drain applications. Options include PVC or ABS plastic adapter and True Blue Premium Washers for superior sealing. Available in white or black polypropylene plastic.

Job Reference

DESCRIPTION

- Made of polypropylene plastic
- Plastic Tubular P-Trap with Threaded Adapter
  - Plastic Tubular Quarter Bend
  - Plastic Tubular J-Bend
  - Schedule 40 Threaded Adapter
  - (3) Slip Joint Nuts
  - (1) 1-½" Washer
  - (1) 1-¼" x 1-½" Reducing Washer
- Reversible P-Trap includes reversible J-Bend
- Deep Flange P-Trap includes plastic deep flange

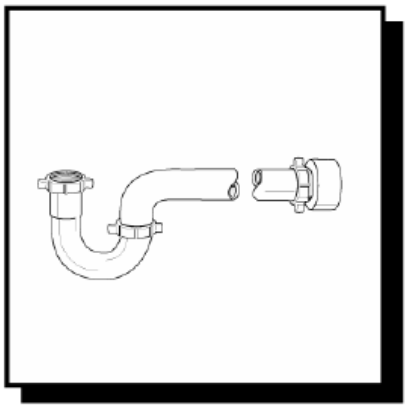

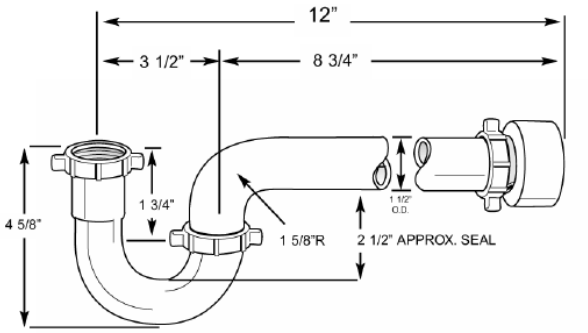

- Meets ASTM F 409
- IAPMO Listed

✓	Product No.	Description	Carton Quantity	Carton Weight (lbs)
	P9703W	1-½" P-Trap w/ Threaded PVC Adapter with True Blue Premium Washers – White		
	P9703BG	1-½" P-Trap w/ Threaded PVC Adapter & Reversible J-Bend – White, Bagged	25	19.4
	A9703WBG	1-½" P-Trap w/ Threaded PVC Adapter & Reversible J-Bend with True Blue Premium Washers –Black, Bagged	25	19.4
	P9704	1-½" P-Trap w/ Threaded PVC Adapter – White	25	11.8
	A9704	1-½" P-Trap w/ Threaded ABS Adapter – Black	25	11.7
	P9704A	1-½" P-Trap w/ Threaded ABS Adapter – White	25	11.8
	P9704AB	1-½" P-Trap w/ Threaded ABS Adapter – White, Bagged	25	19.2
	P9704BG	1-½" P-Trap w/ Threaded PVC Adapter – White, Bagged	25	19.4
	P9704AWB	1-½" P-Trap w/ Threaded ABS Adapter & Reversible J-Bend with True Blue Premium Washers – White, Bagged	25	19.4
	A9704B	1-½" P-Trap w/ Threaded ABS Adapter – Black, Bagged	25	19.3
	P9704DF	1-½" P-Trap w/ Threaded PVC Adapter & Deep Flange– White	25	12.8
	A9704DF	1-½" P-Trap w/ Threaded ABS Adapter & Deep Flange – Black	25	12.6
	P9704DFB	1-½" P-Trap w/ Threaded PVC Adapter & Deep Flange – White, Bagged	25	21.2
	A9704WB	1-½" P-Trap w/ Threaded ABS Adapter & Reversible J-Bend with True Blue Premium Washers – Black, Bagged	25	19.4

L-2 TYPE A LAVATORY

AQUAFLO®

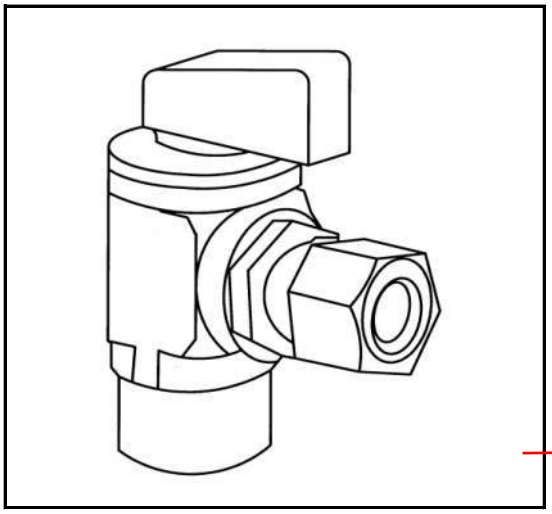

QUARTER-TURN ANGLE VALVES

Specification Sheet

NICKEL		
PART NUMBER	INLET	OUTLET
V-001-A	5/8" O.D. Compr	1/4" O.D. Compr
V-100-A	1/2" Sweat	3/8" O.D. Compr
V-101-A	5/8" O.D. Compr	3/8" O.D. Compr
V-102-A	1/2" F.I.P.	3/8" O.D. Compr
V-103-A	1/2" PEX	3/8" O.D. Compr
V-104-A	1/2" WIRSBO PEX	3/8" O.D. Compr
V-105-A	3/8" F.I.P.	3/8" O.D. Compr
V-106-A	3/8" O.D. Compr	3/8" O.D. Compr
V-107-A	1/2' F.I.P.	3/4" Hose Thread
V-300-A	1/2" Sweat	1/2" O.D. Compr
V-301-A	5/8" O.D. Compr	1/2" O.D. Compr
V-302-A	1/2" F.I.P.	1/2" O.D. Compr
V-303-A	1/2" PEX	1/2" O.D. Compr
V-400-A	1/2" Sweat	1/2" OR 7/16" Slip Joint
V-401-A	5/8" O.D. Compr	1/2" OR 7/16" Slip Joint
V-402-A	1/2" F.I.P.	1/2" OR 7/16" Slip Joint
V-403-A	1/2" PEX	1/2" M.I.P. / Sweat
V-500-A	1/2" CPVC	3/8" O.D. Compr
V-602-A	5/8" O.D. Compr	3/8" O.D. Compr.
POLISHED BRASS		
V-201-A	5/8" O.D. Compr	3/8" O.D. Compr
V-202-A	1/2" F.I.P.	3/8" O.D. Compr

For Lead Free product add "-LL" to the end of the part number.

DESIGN FEATURES

- Quick quarter-turn shut-off.
- Heavy duty brass construction ensures durability.
- Ball style valve will not freeze up.
- Teflon seats for extra wear resistnace.
- Pliable 0-rings will not distort or break down.
- One-year limited warranty

COMPLIANCES/LISTINGS

- IAPMO Certified
- NSF Compliant
- Meet or exceed ASME A112.18.1
- Federal Specification WWP 541E

Certified to NSF/ANSI 61

UPC

OPERATING SPECIFICATION

Temperature: 40-180ºF
Pressure: 125 PSI max.

Product Submittal	
Job Name	
Date	
Part Number	Quantity
Architect	
Contractor	

LSP PRODUCTS GROUP
3689 Arrowhead Drive, Carson City, NV 89706
Phone (800) 854-3215 Fax (800) 243-1777
E-mail sales@lspproducts.com Website www.lspproducts.com

Content matter is subject to change at any time. It is the user's responsibility to ensure the most updated revisions are obtained.

AF/S-2017 (05-11) Rev 3

L-2 TYPE A LAVATORY

LAV GUARD® 2

FAST FIT UNDERSINK PIPING COVERS

All New E-Z Series

ADA-compliant undersink protection

TRUEBRO® IPS CORPORATION

Submittal Sheet

General Description:

LAV GUARD® 2 E-Z Series waste and supply piping covers satisfy ADA compliance requirements. Built-in *E-Z Grip* internal fasteners and internal, *E-Z Tear-To-Fit* trimming feature allow for fast installation without tools. *Series #100 E-Z* kits are designed to fit on all tubular and cast brass P-trap assemblies. *Series #400* kits are the "original" LAV GUARD design and fit schedule 40 ABS and PVC P-trap assemblies — regardless of their geometry or rotational offset. Valve cover completely encloses angle valve and supply tube for both handled and keyed type water stops.

Material	Molded vinyl
Nominal Wall	1/8" constant
Durometer	70 - 80 - Shore A
UV Protection	Will not fade or discolor
Durability	Virtually indestructible
Trimming (E-Z Series)	Internal, *E-Z Tear-To-Fit* trim feature
Fasteners (E-Z Series)	Internal *E-Z Grip* fasteners (reusable)
Color	China white
Paintability	Apply Latex paint
Burning Characteristics ASTM D-635	Self extinguished 0 sec (ATB) 0 mm (AEB)
Bacteria/Fungus Resistance	ASTM G21 and G22/ Result: 0 growth
Maintenance	Use common detergents

Manufactured under one or more of the following U.S. or Canadian patents. Other patents pending.

5,303,730 5,360,031 5,524,669 5,564,463 5,678,598 5,699,828 5,915,412 5,915,413 5,901,739 5,960,820 2,075,324 2,119,427 2,136,027 2,158,083

TRUEBRO® IPS CORPORATION

IPS Corporation, 202 Industrial Park Lane, Collierville, TN 38017
(901) 853-5001 (800) 340-5969 FAX: (901) 853-5008
e-mail: info@truebro.com Internet: http://www.truebro.com

Shown with **Accessory #105 E-Z** (fits wheelchair strainers). Accessories105 can be purchased separately.

NOTE: Accessory #105 E-Z is includ

LAV GUARD ONLY FOR USE AT TYPE A UNITS

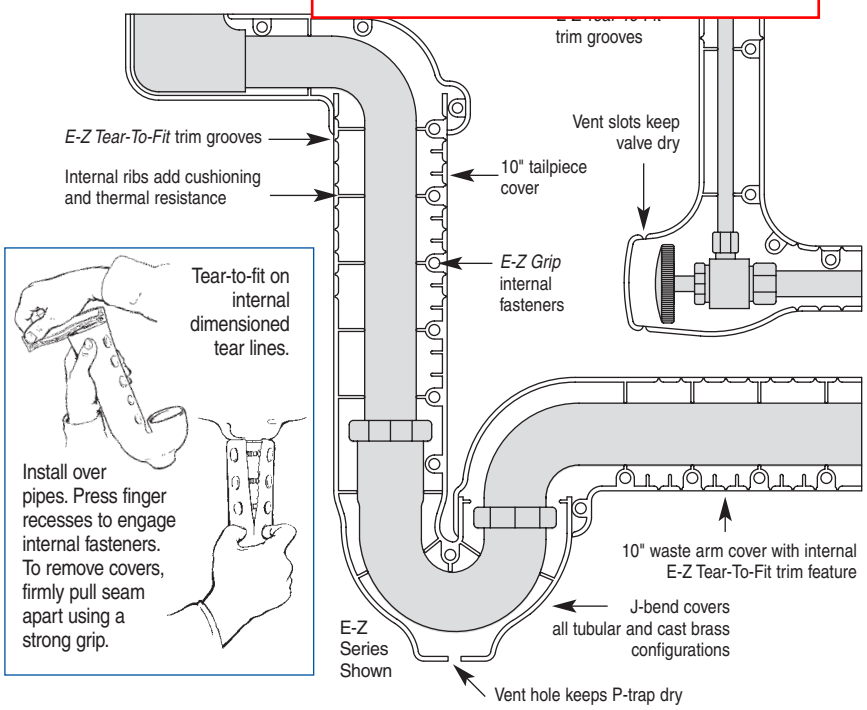

#100 E-Z Series *(shown above right) for tubular and cast brass P-trap assemblies.*
#400W* Series *(original design) for schedule 40 P-trap assemblies.*

☐ **Model #99 E-Z**
One angle valve and supply cover

☐ **Model #100 E-Z**
One P-trap cover

☐ **Model #400W***
One P-trap cover

☐ **Model #101 E-Z**
One P-trap cover, one angle valve cover

☐ **Model #401W***
One P-trap cover, one angle valve cover

☐ **Model #102 E-Z**
One P-trap cover, two angle valves and covers

☐ **Model #402W***
One P-trap cover, two angle valves and covers

☐ **Model #103 E-Z**
One P-trap cover, two angle valves and supply covers, one 5" offset tailpiece wheelchair strainer cover

☐ **Accessory #105 E-Z**
One 5" offset tailpiece wheelchair strainer assembly

*All #400W series items are the "original" LAV GUARD® design and construction. Specifications may change without notice.

☐ **Accessory #105-K**
Kohler 6" offset

☐ **Accessory #106 E-Z**
One basket strainer cover and offset waste cover (adjustable to 18")

☐ **Accessory #107 E-Z**
Two basket strainer covers and center or end outlet waste cover (adjustable)

☐ **Accessory #Ex99 E-Z**
One 16" extension for water supply

☐ **Accessory #Ex100 E-Z**
One 16" extension for drain waste arm or tailpiece

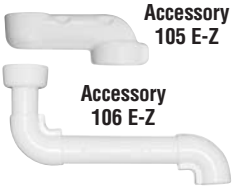

Accessory 105 E-Z

Accessory 106 E-Z

Accessory 107 E-Z
(Configuration Options Shown)

Job/Location _____

Designer _____

TRUEBRO reserves the right to make product and material changes at any time without notice. 2 / 07

L-2 TYPE A LAVATORY

LAV GUARD®2

FAST FIT UNDERSINK PIPING COVERS

All New E-Z Series

LAV GUARD ONLY FOR USE AT TYPE A UNITS

NEW *E-Z Grip*, built-in fasteners are quick, strong, and reusable

New LAV GUARD® 2 E-Z series provides the durable, attractive protection LAV GUARD® is famous for. Now, built-in *E-Z Grip* fasteners and internal *E-Z Tear-To-Fit* trimming feature eliminate the need for tools, and provide for a clean, tamper-resistant, **super-fast** professional installation.

Since 1990, we at TRUEBRO, INC. have concentrated our efforts on "Making America Accessible" by creating products that address ADA-mandated undersink wheelchair accessibility.

Specifying TRUEBRO is your assurance of protecting people with disabilities while providing quality, durability, and improved aesthetics.

Proudly Made in the U.S.A.

TRUEBRO®

IPS CORPORATION

UPC®

L-2 TYPE A LAVATORY

10800/TRU
BuyLine 9143

LAV GUARD 2
FAST FIT UNDERSINK PIPING COVERS

Features and Benefits:

New, improved E-Z series makes installation super-fast

- New *E-Z Tear-To-Fit* feature makes trimming super-fast and contractor-friendly—no tools required.
- New *E-Z Grip* built-in fasteners are quick, strong, and reusable.
- New universal design fits more P-traps and thumb wings on plastic compression nuts.

LAV GUARD 2 E-Z series installs in just 2 easy steps:

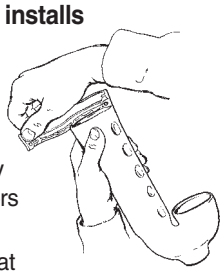

1. *Tear-To-Fit* on internal, dimensioned tear lines for quick, clean, accurate trimming to fit virtually any piping configuration. Covers flex to install over pipes.

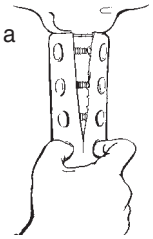

2. Press seams together at finger recesses to engage *E-Z Grip* internal fasteners for a secure, safe, tamper-resistant installation. To remove cover, firmly pull seam apart using a strong grip. To reinstall, press seams back together.

Strict code compliance minimizes risk.

LAV GUARD 2 complies with: ADA article 4.19.4, CABO/ANSI 4.20.4, UFAS 4.19.4, California Title 24, UPC, IPC, ICC, Canada Barrier-Free Code.

Suggested Specification:

ADA-conforming, wheelchair accessible lavatory P-trap and angle valve assemblies shall be covered with white, molded, antimicrobial TRUEBRO, INC. LAV GUARD 2 undersink pipe covers. Cover shall have internal, *E-Z Tear-To-Fit* trim feature for square, clean trimming—internal ribs—and built-in, concealed *E-Z Grip* fasteners (no cable-tie fasteners allowed).

Model _____

Accessory _____

TRUEBRO IPS CORPORATION

IPS Corporation
202 Industrial Park Lane
Collierville, TN 38017

(901) 853-5001 (800) 340-5969
FAX: (901) 853-5008

e-mail: info@truebro.com
Internet: http://www.truebro.com

Manufactured under one or more of the following U.S. or Canadian patents. Other patents pending.

5,303,730 5,360,031
5,524,669 5,564,463
5,678,598 5,699,828
5,915,412 5,915,413
5,901,739 5,960,820
2,075,324 2,119,427
2,136,027 2,158,083

Specifications:

LAV GUARD ONLY FOR USE AT TYPE A UNITS

Material	Soft, resilient mo
Nominal Wall	1/8" constant wi
Durometer	70-80 — Shore
UV Protection	Will not fade or c
Durability	Virtually indestructible
Trimming (E-Z Series)	Internal *E-Z Tear-To-Fit* trim feature
Fasteners (E-Z Series)	Internal *E-Z Grip* fasteners, reusable
Color	China white
Compatibility #100 E-Z Series	Fits all 1-1/4" or 1-1/2" cast brass or tubular P-trap assemblies and 3/8" or 1/2" angle stop assemblies
Compatibility #400* Series	Fits all 1-1/2" schedule 40 plastic P-traps
Paintability	Apply latex paint
Burning Characteristics ASTM D-635	Self extinguished 0 sec (ATB) mm (AEB)
Bacteria/Fungus Resistance	ASTM G21 and G22 — Result: 0 growth
Maintenance	Wipe clean using common detergents

Models Available

- #100 E-Z series for tubular P-traps
- #400W* series for schedule 40 plastic P-traps

#99 E-Z	one angle valve and supply cover
#100 E-Z & #400W*	one P-trap cover
#101 E-Z & #401W*	one P-trap cover, one angle valve and supply cover
#102 E-Z & #402W*	one P-trap cover, two angle valves and supply covers
#103 E-Z	one P-trap cover, two angle valves and supply covers, one 5" offset tailpiece wheelchair strainer cover
Accessories:	
#105 E-Z	one 5" offset tailpiece wheelchair strainer assembly
#105-K	Kohler 6" offset
#106 E-Z	one basket strainer cover and offset waste cover (adjustable to 18")
#107 E-Z	two basket strainer covers and center or end outlet waste cover (adjustable)
Extensions:	
#EX99 E-Z	one 16" extension for water supply
#EX100 E-Z	one 16" extension for drain waste arm or tailpiece

*All #400 series items are the "original" LAV GUARD® design and construction.
Specifications may change without notice.

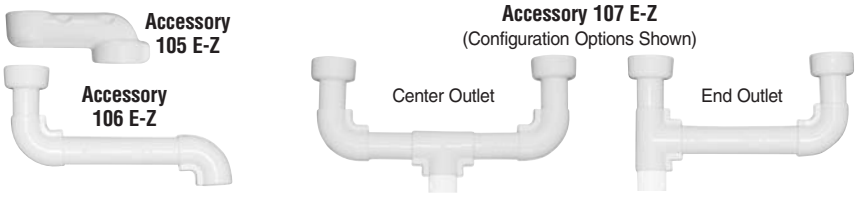

Shown with **Accessory #105 E-Z** (fits all standard 5" offset wheelchair strainers). Accessories105 E-Z,106 E-Z, and 107 E-Z can be purchased separately.
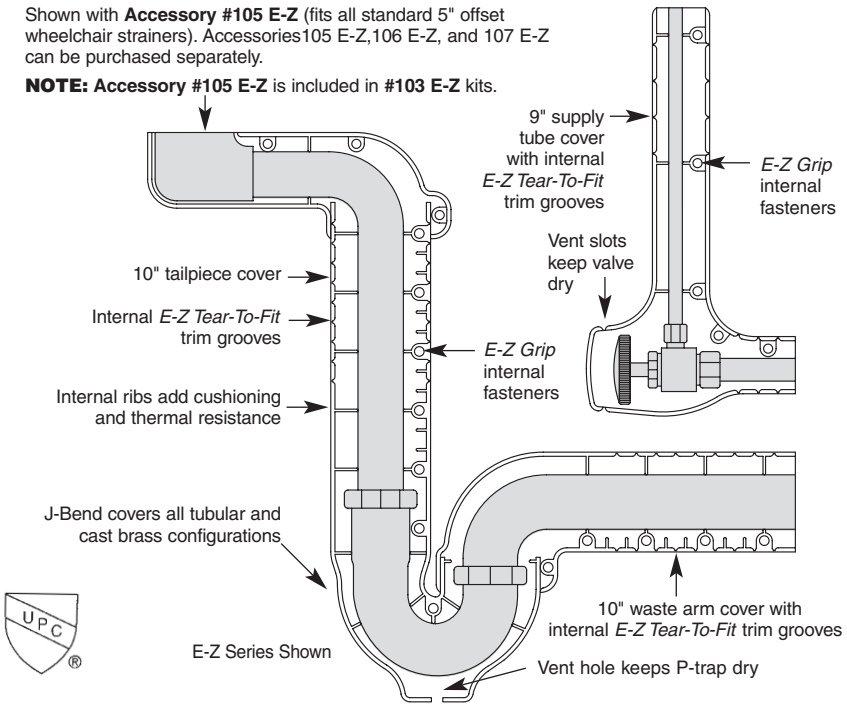
NOTE: Accessory #105 E-Z is included in **#103 E-Z** kits.